FLORISSANT CITY COUNCIL AGENDA
City Hall
955 rue St. Francois
Monday, November 28th, 2016
7:30 PM
Karen Goodwin, MMC/MRCC

I. PLEDGE OF ALLEGIANCE

II. ROLL CALL OF MEMBERS

III. APPROVAL OF MINUTES

- Meeting Minutes of November 14th, 2016

IV. CERTIFICATES OF APPRECIATION

- Golden Management – Steven & Milton Goldenberg
- Florissant Valley FPD – Chief Scott Seppelt
- Black Jack FPD – Chief Ken Corbin
- All American Painting - Rick Phillips
- Painters District Council 58 – Rich Lucks, Mark Summercalf, Scott Savory
- Painters & Allied Trades – Greg Raftery
- Porter Paint – Shane Glascock
- Electrical Connectors – Senator Emeritus Tim Green
- KB Electric – Brian Kohnen
- Meridian Waste Solutions – Chuck Barcom

V. SPECIAL PRESENTATION

- Tim Green, Legislative update

VI. HEARING FROM CITIZENS

(Speaker cards are available at the entrance to the Council Chambers)

VII. COMMUNICATIONS

1. Email dated November 16, 2016 from Morgan Tucker expressing opposition to the breed restrictive legislation.
2. Email dated November 17, 2016 from Tamara Vastine requesting the repeal of the pit bull breed ban.
3. Email dated November 18, 2016 from Donna Slemmer requesting the repeal of the breed ban.
4. Email dated November 18, 2016 from Michelle Yancy requesting the repeal of the pit bull ban.
5. Email dated November 20, 2016 from Carl Hughes requesting the repeal of the breed specific legislation.
6. Email dated November 21, 2016 from Lisa Hughes requesting the repeal of the pit bull ban.
7. Email dated November 21, 2016 from Cheryl Genail requesting the repeal of the breed specific ban.
8. Email dated November 21, 2016 from Derrick Hughes requesting the repeal of the pit bull ban.
9. Email dated November 21, 2016 from Peggy Mullenschlader requesting the repeal of the breed specific legislation.

VIII. PUBLIC HEARINGS

16-09-026 Ward 3 Application Staff Rpt Plans	Request to rezone for Lyons Properties, LLC d/b/a Dunkin Donuts the property located at 8115 N. Lindbergh from B-3 "Extensive Commercial District" to B-5 "Planned Commercial District" to allow for the construction of a new building. (Continued to this day on 9/27/16 and 10/24/16)(Additional continuation requested by the petitioner).	Tim Kaufmann
16-11-034 Application Staff Rpt Plans	Request to authorize an amendment to Special Permit No. 7952 to Global Signal Acquisitions II, LLC d/b/a Crown Castle to allow for additional antennas on existing disguised tower pole for the property located at 62 Grandview Plaza Shopping Center. (Planning and Zoning recommended approval on 11/7/16)	Jeff Barnett

IX. OLD BUSINESS

A. SECOND READINGS

9233 Application Staff Rpt Plans	Ordinance to rezone for Bridle Development Corporation for the property located at 2710 N. Hwy 67 from B-3, Extensive Commercial District to B-5, Planned Commercial District to allow for the redevelopment of a shopping center and construction of a sit-down carry-out and drive-thru restaurant.	2nd Reading Siam
9236 Application Staff Rpt Plans	Ordinance to authorize an amendment to Special Permit No. 5045, as amended, to Slater Enterprises d/b/a Kentucky Fried Chicken to allow for an exterior remodel for the property located at 2450 N. Highway 67. (Planning and Zoning Commission recommended approval on 10/17/16)	2nd Reading Siam
9237 Application Staff Rpt Plans	Ordinance to rezone for Quality Assurance Group, LLC for the property located at 150 Washington from B-2, Central Business District & HB, Historic Business District to allow for the entire property to be zoned HB, Historic Business District. (Planning and Zoning Commission recommended approval on 10/17/16)	2nd Reading Henke
9238 Memo	Ordinance amending section 125.065.A "Job Classification And Grade Level" by amending the grade level for selected job classifications and by adding job classifications.	2nd Reading Pagano
9239 2017 Budget	Ordinance adopting the budget for the City of Florissant for the fiscal year commencing on December 1, 2016 and ending on November 30, 2017 and providing for its effective date.	2nd Reading Council as a whole
S9240 CDU	Ordinance authorizing and directing the issuance, sale and delivery of special obligation bonds, series 2016, of the City of Florissant, Missouri; and approving certain documents and authorizing certain other actions in connection therewith.	2nd Reading Council as a whole
9241 Contract	Ordinance repealing ordinance no. 8099 and authorizing the Mayor of the City of Florissant to enter into a contract with the law firm of Lewis, Rice, represented by John M. Hessel for legal services for the City of Florissant commencing on December 1, 2016 and ending on November 30, 2018.	2nd Reading Council as a whole

X. NEW BUSINESS

XI. BOARD APPOINTMENTS

XII. REQUESTS

Application (Ward 9)	Request for a transfer of Special Use Permit no. 8196 from Yang Enterprise Inc. to Dong #1 China LLC d/b/a #1 Chinese Restaurant located at 2738 N. Hwy 67.	Sheng Qui Dong

XIII. BILLS FOR FIRST READING

9244 Application Staff Rpt Plans	Ordinance to authorize an amendment to Special Permit No. 7952 to Global Signal Acquisitions II, LLC d/b/a Crown Castle to allow for additional antennas on existing disguised tower pole for the property located at 62 Grandview Plaza Shopping Center.	Pagano
9245 Application	Ordinance authorizing a transfer of Special Use Permit no. 8196 from Yang Enterprise Inc. to Dong #1 China LLC d/b/a #1 Chinese Restaurant located at 2738 N. Hwy 67.	Siam
9246 Memo	Ordinance to enable the City of Florissant, Missouri to join the Missouri clean energy district pursuant to sections §67.2800 to §67.2835, inclusive, RSMo., the "property assessed clean energy act," and stating the terms under which the city will conduct activities within the city as a member of such district.	Council as a whole
E9247	Ordinance amending section 125.065.a "Job Classification And Grade Level" by adding a job classification.	Lee
9248 Memo	Ordinance amending Title III of the Florissant City Code, Schedule XIII, Table XII-A "Parking Prohibited At All Times On Certain Streets" by deleting Hopi Drive.	Eagan
9249 Memo	Ordinance amending Title III of the Florissant City Code, Schedule XIV by adding a new Table XIV-V "Parking Prohibited At Certain Times" and adding locations on Argo and Zurich.	Pagano

XIV. MOTION TO CANCEL THE DECEMBER 26TH, 2016 COUNCIL MEETING.

XV. COUNCIL ANNOUNCEMENTS

XVI. MESSAGE FROM THE MAYOR

XVII. ADJOURNMENT

THIS AGENDA WAS POSTED AT THE FLORISSANT CITY HALL NOVEMBER 23, 2016 AT 12:00 PM ON THE BULLETIN BOARD OUTSIDE THE COUNCIL CHAMBERS. ANY ONE WISHING TO ATTEND THE COUNCIL MEETING WHO HAS SPECIAL NEEDS SHOULD CONTACT THE CITY CLERK'S OFFICE AT 839-7630 OR TDD 839-5142 BY NOON ON MONDAY, NOVEMBER 28, 2016.

CITY OF FLORISSANT

COUNCIL MINUTES

November 14, 2016

The Florissant City Council met in regular session at Florissant City Hall, 955 rue St. Francois on Monday, November 14, 2016 at 7:30 p.m. with Councilwoman Pagano presiding. The Chair asked everyone in attendance to stand and join in reciting the Pledge of Allegiance.

On Roll Call the following Councilmembers were present: Siam, Lee, Jones, Eagan, Caputa, Schildroth, Henke, Pagano and Schmidt. Also present was Mayor Thomas P. Schneider, City Attorney John Hessel and City Clerk Karen Goodwin. A quorum being present the Chair stated that the Council meeting was in session for the transaction of business.

Councilman Lee moved to approve the Meeting Minutes of 10/24/16, the Budget Meeting Minutes of 10/22/2016 and Budget Meeting Minutes of 11/2/2016, seconded by Jones. Motion carried.

Councilwoman Pagano moved to suspend the rules to hear from Judge Boyle, seconded by Eagan. Motion carried. Judge Boyle updated the Council on the new Missouri Supreme Court Ruling that affects municipal courts directly. Under the new rule, there will be no overlapping between the court staff and the prosecutors – clear separation will be necessary. As a result, a full time staff position will be needed for the prosecutors and he asked that this position be added to next year's budget request.

The Chair stated that the next item on the agenda was *Hearing from Citizens* and asked any citizen who wished to speak to come forward.

Kevin O'Donnell, 512 Rancho Lane, stated that he hoped the Breed Ban issue could be resolved soon. He also stated that the Veterans Day parade was a very nice event, honoring all the veterans.

John Engelmeyer, 1281 Graham Rd., asked the Council to prepare a breed ban ordinance and bring it up for a vote.

Frank Bower, 1700 St. Francois, stated his opposition to the breed ban ordinance and asked that it be repealed.

Lisa Simpson, 690 Kostka, asked that the breed ban legislation be repealed.

Gloria Cafaude, 2790 Parker, expressed her feelings regarding the excessive noise coming from the JJE Ice Rink until midnight.

Tracy Cafaude, 2790 Parker, stated that he expected the city to obey the laws regarding noise violations and reasonable hours of operation in residential neighborhoods.

Peggy Mullenschlater, 1275 Sandy Dr., thanked Mayor Schneider and Councilman Schildroth for their attempts to save some of the dogs that "come through Florissant."

Kristin Korte, 105 Clark, read a letter from a neighbor. The resident asked the Council for a follow up regarding the dangerous dog that continues to run loose in her neighborhood. She suggested that the animal control officers receive more training. The breed specific ordinance should be repealed and the dangerous dog ordinance, already on the books, should be enforced.

The Chair stated that the next item on the agenda was *Communications.*

1. Email, dated October 26, 2016, from Michelle Dovin expressing her opposition to the breed specific legislation.
2. Email, dated October 27, 2016, from Connie Nolan requesting the repeal of the breed ban in Florissant.
3. Email, dated October 31, 2016 from Peggy Mullenschlader requesting the repeal of the breed ban.
4. Email, dated October 27, 2016 from Donna Slemmer requesting the repeal of the pit bull ban.
5. Email, dated November 1st, 2016 From Jeff Cook regarding trash concerns in the streets and parking lots.
6. Email, dated November 2, 2016 from Lisa Ukman requesting the repeal of the breed ban.
7. Email, dated November 3, 2016 from Kristin Korte requesting the repeal of the breed ban.

The next item on the Agenda was Public Hearings.

The City Clerk reported that Public Hearing #16-11-032 to be held this night on a request to authorize an amendment to Special Use Permit No. 5045, as amended, to Slater Enterprises d/b/a Kentucky Fried Chicken to allow for an exterior remodel for the property located at 2450 N. Highway 67 had been advertised in substantially the same form as appears in the foregoing publication and by posting the property. The Chair declared the Public Hearing to be open and invited those who wished to be heard to come forward.

Mike Orf, representative for the petitioner, showed color renderings as to what the renovations would look like. The building will remain brick with an EIFS cap on the top band. There is existing tile on the building which will be repainted, but no brick will be painted. There will be new LED lighting and signage on the side of the building. Councilman Siam asked when the sign survey would

be completed. Mr. Orf explained that if the petitioner maintained the current size of the sign, no amendment to the ordinance would be required. The petitioner is waiting to see what the store owner wants to do in regard to signage. Mr. Orf stated that generally projects similar to this one take 2-3 weeks to complete after permits are issued. The dining area will probably shut down during construction, but the drive-thru will remain open.

The Chair asked if there were any citizens who would like to speak on said public hearing. John Engelmeyer, 1281 Graham, asked if the special use permit should be amended for the sign not to exceed 32 square feet.

Being no other persons who wished to speak, Councilman Siam moved to close P.H. #16-11-032, seconded by Henke. Motion carried.

The City Clerk reported that Public Hearing #16-11-033 to be held this night on a request to rezone for Quality Assurance Group, LLC for the property located at 150 Washington from B-2, Central Business District and HB, Historic Business District to allow for the entire property to be zoned HB, Historic Business District had been advertised in substantially the same form as appears in the foregoing publication and by posting the property. The Chair declared the Public Hearing to be open and invited those who wished to be heard to come forward.

Paul Boyer, Civil Engineer Design Consultants, stated that Jimmy and Tina White would like to open a wine tasting establishment at 150 Washington. Mr. White has purchased the adjacent property as well. Mr. Boyer explained that the property currently has dual zoning: HB at the front of the property and B-2 at the rear. The Whites would like to rezone the entire lot to one district, HB. They plan on renovating the existing 1928 house on the lot. They will build a 1500 square foot addition to add a wine tasting area/restaurant. The food served will be finger food and pizzas. There are two existing sheds, one will be removed. Patios and fire pits will be installed. There will be no light standards and a site proof fence will be constructed around the perimeter of the property. The site plan was developed and created around the large, beautiful trees on the property and to ensure a buffer along Harrison Street. There will be angled parking with ten more spaces at the rear of the building.

Councilman Schildroth met with the petitioner and toured the property. He stated that Mr. White had done an excellent job bringing the adjacent property up to code and working with staff on his project. Mr. White has talked to the neighbors and there were no objections. Councilman Schildroth stated that he was very excited about the proposal and welcomed the Whites to Florissant.

The Chair asked if there were any citizens who would like to speak on said public hearing.

Being none, Councilman Schildroth moved to close P.H. #16-11-033, seconded by Schmidt. Motion carried.

Councilman Henke moved that Bill No. 9228 An ordinance authorizing a Special Use Permit to the Florissant Valley Fire Protection District to allow for the installation of a digital ground sign for the property located at 661 rue St. Ferdinand be read for a second time, seconded by Jones. Motion carried and Bill No. 9228 was read for a second time. Councilman Henke moved that Bill No. 9228 be read for a third time, seconded by Caputa. Motion carried and Bill No. 9228 was read for a third and final time and placed upon its passage. Before the final vote all interested persons were given an opportunity to be heard. On roll call the Council voted: Siam yes, Lee yes, Jones yes, Eagan yes, Caputa yes, Schildroth yes, Henke yes, Pagano yes and Schmidt yes. Whereupon the Chair declared Bill No. 9228 to have passed and said Bill became Ordinance No. 8269.

Councilman Lee moved that Bill No. 9229 An ordinance approving the Community Development Block Grant (CDBG) FY2017 Annual Action Plan for the City of Florissant, Missouri and authorizing and directing the Mayor to submit such plan to the United States Department of Housing and Urban Development be read for a second time, seconded by Caputa. Motion carried and Bill No. 9229 was read for a second time. Councilman Lee moved that Bill No. 9229 be read for a third time, seconded by Eagan. Motion carried and Bill No. 9229 was read for a third and final time and placed upon its passage. Before the final vote all interested persons were given an opportunity to be heard. On roll call the Council voted: Siam yes, Lee yes, Jones yes, Eagan yes, Caputa yes, Schildroth yes, Henke yes, Pagano yes and Schmidt yes. Whereupon the Chair declared Bill No. 9229 to have passed and said Bill became Ordinance No. 8270.

Councilman Pagano moved that Bill No. 9231 An Ordinance authorizing a transfer of $24,000 from Acct. No. 01-5-06-28020 “Golf Course Merchandise” to Acct. No. 01-5-0610030 “Golf Course Part-Time Salaries” to cover part-time salaries for the remainder of the fiscal year be read for a second time, seconded by Henke. Motion carried and Bill No. 9231 was read for a second time. Councilman Pagano moved that Bill No. 9231 be read for a third time, seconded by Lee. Motion carried and Bill No. 9231 was read for a third and final time and placed upon its passage. Before the final vote all interested persons were given an opportunity to be heard. On roll call the Council voted: Siam yes, Lee yes, Jones yes, Eagan yes, Caputa yes, Schildroth yes, Henke yes, Pagano yes and Schmidt yes. Whereupon the Chair declared Bill No. 9231 to have passed and said Bill became Ordinance No. 8271.

Councilman Eagan moved that Bill No. 9232 An Ordinance authorizing a transfer of $10,000 from Acct. No. 01-5-46-10030 "Bangert Pool Salaries" to Acct. No. 01-5-46-26000 "Bangert Pool Utilities" to cover utility costs for the remainder of the fiscal year be read for a second time, seconded by Caputa. Motion carried and Bill No. 9232 was read for a second time. Councilman Schildroth moved that Bill No. 9232 be read for a third time, seconded by Schmidt. Motion carried and Bill No. 9232 was read for a third and final time and placed upon its passage. Before the final vote all interested persons were given an opportunity to be heard. On roll call the Council voted: Siam yes, Lee yes, Jones yes, Eagan yes, Caputa yes, Schildroth yes, Henke yes, Pagano yes and Schmidt yes. Whereupon the Chair declared Bill No. 9232 to have passed and said Bill became Ordinance No. 8272.

The next item on the Agenda was Board Appointments.

Councilman Lee moved to accept the Mayor's appointment of Nancy Goldstein, 540 St. Antoine, to the Environmental Quality Commission as a member from Ward 6 for a term expiring on 11/14/2019, seconded by Pagano. Motion carried.

Councilman Eagan moved to accept the Mayor's appointment of Sandra Jackson, 3275 Longchamps, to the Senior Commission as a member from Ward 8 for a term expiring on 11/14/2019, seconded by Jones. Motion carried.

Councilman Eagan moved to accept the Mayor's appointment of Eugene Royce, 2530 Longview, to the Senior Commission as a member from Ward 4 for a term expiring on 11/14/2019, seconded by Jones. Motion carried.

Councilman Lee moved to accept Substitute Resolution No. 992 A Resolution authorizing the offering for sale of special obligation bonds of the City of Florissant, seconded by Pagano. Motion carried.

Randy McDaniel, Director of Finance appeared before the Council and introduced Michelle Bock, the city's Financial Advisor with Piper Jaffray, and Jason Terry, the Bond Attorney with Gilmore & Bell. There will be a competitive sale of the Resolution Bonds on November 30th. Ms. Bock stated that the amount of the bonds has changed and will likely change again based upon the bids expected. The project funding amount is $8.8 million. Publication of sale on the bids will be done in the next few days, so any changes in the amount to be funded must be finalized tonight. The repayment of the bonds does not start for eight years. Councilwoman Pagano was not prepared to vote on the amount this evening.

Councilman Lee asked what would happen if the Council did not finalize the amount this evening. Accordingly, he asked if the schedule could be "bumped back" two weeks. Ms. Bock stated that they could, but she explained that it was not a good idea to push the date back because the demand to buy the bonds might not be there. Although she does not want the City Council to make a decision they are not comfortable with, she warned that interest rates appear to be rising and she encouraged the Council to move forward as quickly as possible. Councilman Lee expressed concerns about the amount of the bonds and stated he would like to discuss a more conservative figure. Discussion was had on various amounts.

Councilman Eagan moved to amend to change the amount of the project funding bonds to $8.2 million, seconded by Henke. Motion carried.

Councilman Pagano moved that amended Substitute Resolution No. 992 be read for a second time, seconded by Lee. Motion carried and amended Substitute Resolution No. 992 was read for a second time. Councilman Lee moved that amended Substitute Resolution No. 992 be read for a third time, seconded by Pagano. Motion carried and amended Substitute Resolution No. 992 was read for a third and final time and placed upon its passage. Before the final vote all interested persons were given an opportunity to be heard.

John Engelmeyer, 1281 Graham Rd., questioned Sections A8, A12, A13 and A16 in the Resolution. He asked if the Council would guarantee that no property taxes would be raised over the next 10 years. Specific numbers were not given for the cost of the court house renovation and what the additional bond funding would be used for. Councilman Lee responded that the budget for the court house renovation, at this point, changes as different issues arise. The remainder of the funding will be used for the Eagan Center HVAC system and energy efficiency contract and is close to being completed. Discussion was had.

Kevin O'Donnell, 512 Rancho Lane, expressed his concern about the bond issue and stated that he does not support it. Before the final vote all other interested persons were given an opportunity to be heard. On roll call the Council voted: Siam yes, Lee yes, Jones yes, Eagan yes, Caputa yes, Schildroth yes, Henke yes, Pagano yes and Schmidt yes. <u>Whereupon the Chair declared amended Substitute Resolution No. 992 to have been adopted.</u>

Councilman Schmidt introduced Bill No. 9227 <u>An Ordinance amending Chapter 520 "Signs & Billboards," Subsection 520.020 "Chapter Not Applicable to Certain Signs" by amending Section (A)(5) to increase the size of signage allowed in commercial areas to 32 square feet,</u> seconded by

Eagan. Councilman Lee moved to amend the motion to table Bill No. 9227, seconded by Pagano. Motion carried.

Councilman Siam introduced Bill No. 9233 An Ordinance to rezone for Bridle Development Corporation the property located at 2710 N. Hwy. 67 from B-3, Extensive Commercial District to B-5, Planned Commercial District to allow for the redevelopment of a shopping center and construction of a sit-down, carry-out and drive-thru restaurant and said Bill was read for the first time.

Councilman Schmidt moved that Bill No. 9233 be read for a second time for the purpose of discussion, seconded by Lee. Motion carried. Councilman Schmidt stated that he would like clarification as to whether or not an approved 40 foot sign was included in the ordinance. Mr. Hessel explained that an amendment to the ordinance would be necessary in order to include a 40 foot pole sign. Councilman Schmidt moved to postponed Bill No. 9233 to 11/28/2016, seconded by Jones. Motion carried.

Councilwoman Pagano introduced Bill No. 9234 An Ordinance authorizing an appropriation of $50,000 from the General Revenue Fund to Acct. No. 4050 "Professional Services" to fund additional attorney fees through the end of the fiscal year and said Bill was read for the first time. Councilman Lee moved that Bill No. 9234 be read for a second time, seconded by Eagan. Motion carried and Bill No. 9234 was read for a second time. Councilman Lee moved that Bill No. 9234 be read for a third time, seconded by Jones. On roll call the Council voted: Siam yes, Lee yes, Jones yes, Eagan yes, Caputa yes, Schildroth yes, Henke yes, Pagano yes and Schmidt yes. Having received the unanimous vote of all members present Bill No. 9234 was read for the third and final time and placed upon its passage.

Before the final vote all interested persons were given an opportunity to be heard. Being no persons who wished to be heard, on roll call the Council voted: Siam yes, Lee yes, Jones yes, Eagan yes, Caputa yes, Schildroth yes, Henke yes, Pagano yes and Schmidt yes. Whereupon the Chair declared Bill No. 9234 to have passed and said Bill became Ordinance No. 8273.

Councilwoman Pagano introduced Bill No. 9235 An Ordinance authorizing an appropriation of $5,000 from the General Revenue Fund to Acct. No. 4033 "Copy Equipment and Supplies" to cover the remainder of the copier lease through the end of the fiscal year and said Bill was read for the first time. Councilman Lee moved that Bill No. 9235 be read for a second time, seconded by Pagano. Motion carried and Bill No. 9235 was read for a second time. Councilman Lee moved that Bill No. 9235 be read for a third time, seconded by Pagano. On roll call the Council voted: Siam yes, Lee yes,

Jones yes, Eagan yes, Caputa yes, Schildroth yes, Henke yes, Pagano yes and Schmidt yes. Having received the unanimous vote of all members present Bill No. 9235 was read for the third and final time and placed upon its passage.

Before the final vote all interested persons were given an opportunity to be heard. Being no persons who wished to be heard, on roll call the Council voted: Siam yes, Lee yes, Jones yes, Eagan yes, Caputa yes, Schildroth yes, Henke yes, Pagano yes and Schmidt yes. Whereupon the Chair declared Bill No. 9235 to have passed and said Bill became Ordinance No. 8274.

Councilman Siam introduced Bill No. 9236 An Ordinance to authorize an amendment to Special Permit No. 5045, as amended, to Slater Enterprises d/b/a Kentucky Fried Chicken to allow for an exterior remodel for the property located at 2450 N Highway 67 and said Bill was read for the first time by title only.

Councilman Henke introduced Bill No. 9237 An Ordinance to rezone for Quality Assurance Group, LLC, the property located at 150 Washington from B-2, Central Business District & HB, Historic Business District to allow for the entire property to be zoned HB, Historic Business District and said Bill was read for the first time by title only.

Councilman Pagano introduced Bill No. 9238 An Ordinance amending Section 125.065.A "Job Classification and Grade Level" by amending the grade level for selected job classifications and by adding job classifications and said Bill was read for the first time. Councilman Lee moved that Bill No. 9238 be read for a second time for the purpose of discussion, seconded by Eagan. Motion carried.

Councilwoman Lee moved to postpone Bill No. 9238 to 11/28/2016, seconded by Lee. Motion carried.

Council as a Whole introduced Bill No. 9239 An Ordinance adopting the budget for the City of Florissant for the fiscal year commencing on December 1, 2016 and ending on November 30, 2017 and providing for its effective date and said Bill was read for the first time.

Councilman Lee moved that Bill No. 9238 be read for a second time for the purpose of discussion, seconded by Eagan. Motion carried.

Councilman Lee moved to amend the budget to add on page 21, "Salaries - 4110" to restore the position of Assistant Court Clerk, seconded by Pagano. Motion carried.

Councilman Lee moved to amend the budget on page 77, to restore one additional Jacobson Eclipse 322 attachment, seconded by Henke. Motion carried.

Councilwoman Lee moved to postpone Bill No. 9238 to 11/28/2016, seconded by Pagano. Motion carried.

Council as a Whole introduced Bill No. 9240 An Ordinance authorizing and directing the issuance, sale and delivery of special obligation bonds, Series 2016, of the City of Florissant, Missouri; and approving certain documents and authorizing certain other actions in connection therewith and said Bill was read for the first time by title only.

Council as a Whole introduced Bill No. 9241 An Ordinance repealing Ord. No. 8099 and authorizing the Mayor of the City of Florissant to enter into a contract with the law firm of Lewis & Rice represented by John M. Hessel for legal services for the City of Florissant commencing on December 1, 2016 and ending on November 30, 2018 and said Bill was read for the first time by title only.

Councilman Lee introduced Bill No. 9242 An Ordinance amending Ord. No. 8182 establishing a new compensation plan for part-time employees of the City of Florissant by deleting the Golf Groundskeeper III classification and adding "Golf" to the "Street, Health, Parks Laborer and Truck Driver Classification" and said Bill was read for the first time. Councilman Lee moved that Bill No. 9242 be read for a second time, seconded by Schildroth. Motion carried and Bill No. 9242 was read for a second time. Councilman Lee moved that Bill No. 9242 be read for a third time, seconded by Schildroth. On roll call the Council voted: Siam yes, Lee yes, Jones yes, Eagan yes, Caputa yes, Schildroth yes, Henke yes, Pagano yes and Schmidt yes. Having received the unanimous vote of all members present Bill No. 9242 was read for the third and final time and placed upon its passage.

Before the final vote all interested persons were given an opportunity to be heard. Being no persons who wished to be heard, on roll call the Council voted: Siam yes, Lee yes, Jones yes, Eagan yes, Caputa yes, Schildroth yes, Henke yes, Pagano yes and Schmidt yes. Whereupon the Chair declared Bill No. 9242 to have passed and said Bill became Ordinance No. 8275.

Councilman Lee introduced Bill No. 9243 An Ordinance amending Ord. No. 8183 establishing a new compensation plan for seasonal part-time employees of the City of Florissant by deleting the Golf Groundskeeper II classification and said Bill was read for the first time. Councilman Lee moved that Bill No. 9243 be read for a second time, seconded by Schmidt. Motion carried and Bill No. 9243 was read for a second time. Councilman Lee moved that Bill No. 9243 be read for a third time, seconded by Henke. On roll call the Council voted: Siam yes, Lee yes, Jones yes, Eagan yes, Caputa

yes, Schildroth yes, Henke yes, Pagano yes and Schmidt yes. Having received the unanimous vote of all members present Bill No. 9243 was read for the third and final time and placed upon its passage.

Before the final vote all interested persons were given an opportunity to be heard. Being no persons who wished to be heard, on roll call the Council voted: Siam yes, Lee yes, Jones yes, Eagan yes, Caputa yes, Schildroth yes, Henke yes, Pagano yes and Schmidt yes. Whereupon the Chair declared Bill No. 9243 to have passed and said Bill became Ordinance No. 8276.

The next item on the Agenda was Council Announcements.

Councilman Eagan announced that the annual "Guns and Hoses" boxing event will be held the day before Thanksgiving. Get well wishes were sent out to Mary Gettemier of the Flower Pot.

Councilman Jones encouraged all residents to contribute/donate to TEAM. He also stated that Cortez Drive was now open and the work on Shackelford Road had begun.

Councilman Lee congratulated the city on a great Veterans Day Parade and thanked all the veterans for their service.

Councilman Caputa congratulated the Marine Corp on their 241th birthday. He stated that the parade was a wonderful Florissant event and congratulated the Veteran of the Year. He encouraged fire arm owners to be responsible and secure their guns.

Councilman Siam announced a Ward 9 Meeting on Tuesday, November 15th at the Eagan Center.

Councilman Henke announced a Neighborhood Watch Meeting for Ward 6 on November 15 at City Hall at 7 pm.

Councilman Schildroth wished the Marine Corp a Happy Birthday. Warm wishes were sent out to Mary Gettemier of the Flower Pot. He thanked everyone who attended the wonderful Veterans Day Event and Valley Industries for their assistance.

The next item on the Agenda was Mayor Announcements.

The annual Florissant Veterans Day Parade, held on November 13, appeared to be getting bigger and better every year. The Florissant Valley Fire Protection District has set up a house on 1475 Carla to be used as a first responder training facility. The Mayor thanked all the organizations and individuals who volunteered their time to make this happen. The Rotary Action is this weekend at the Detrick Center at Christian Hospital at 6 pm. The Chamber's "Night of the Stars" will be on December 2. Project Liftoff and Christmas in Old Town are scheduled for December 3. A "Winter Break Camp" will be held over the Christmas holidays at the JJE Center for school kids.

The next City Council Meeting is scheduled for Monday, November 28, 2016 at 7:30 pm. Councilman Jones moved to adjourn the meeting, seconded by Eagan. Motion carried. The meeting was adjourned at 9:48 p.m.

_____

Karen Goodwin, City Clerk

The following Bills were signed by the Mayor:

Bill No. 9228	Ord. 8269
Bill No. 9229	Ord. 8270
Bill No. 9231	Ord. 8271
Bill No. 9232	Ord. 8272
Bill No. 9234	Ord. 8273
Bill No. 9235	Ord. 8274
Bill No. 9242	Ord. 8275
Bill No. 9243	Ord. 8276

Karen Goodwin

From:	Morgan Tucker <mmstlink@gmail.com>
Sent:	Wednesday, November 16, 2016 2:35 PM
To:	Karen Goodwin
Subject:	To the city council as a whole
Follow Up Flag:	Flag for follow up
Flag Status:	Flagged

My name is Morgan Tucker and I live at 380 Allen Drive.

I do not support breed restrictive legislation. One basic problem with branding pit bulls as vicious is the impossibility of defining the borders of the breed. Basing the category on physical characteristics invariably casts too wide a net, including many mixed-breed dogs that have blocky heads or brindle coats. More than 20 breeds of dogs share some physical traits with pit bulls. Conversely, as genetic tests show, dogs with absolutely no physical resemblance to pit bulls may still descend from them.

Every reputable group that has examined the issue condemns breed-based dog laws, including **the American Bar Association**, the **American Veterinary Society of Animal Behavior**, the **American Veterinary Medical Association**, the **United Kennel Club**, and the **American Kennel Club**. Even the White House has come out against these types of bans, stating that "research shows that bans on certain types of dogs are largely ineffective and often a waste of public resources."

The White House's statement goes on to suggest that a **"community-based approach to prevent dog bites"** is a better alternative. This approach involves figuring out the dog-related problems specific to a given community, and asking local organizations and groups to help be a part of solving these problems.

I also ask that this message be placed on the next city council agenda. Thank you.

Morgan Tucker

cc to Council
11/23/16

Karen Goodwin

From:	Tamara Vastine <tamaravastine@yahoo.com>
Sent:	Thursday, November 17, 2016 12:50 PM
To:	Karen Goodwin
Subject:	Communications Agenda
Follow Up Flag:	Flag for follow up
Flag Status:	Flagged

To the entire city council of Florissant Mo

My Name is Tamara S Vastine I reside at 2635 Cheshire Dr Florissant Mo 63033 and I would like to place my request for the repeal of the pitbull breed ban in Florissant. I would also like this request listed on the city council meeting agenda I am disabled and would like my voice to be heard. Please reply to my email and let me know that my email was received and I will be listed in the communications.

Thanks in Advance
Tamara S Vastine

Karen Goodwin

From: Donna <dslem3@yahoo.com>
Sent: Friday, November 18, 2016 1:02 PM
To: Karen Goodwin
Subject: To City Council

Follow Up Flag: Flag for follow up
Flag Status: Flagged

Dear Members of the City Council,
I'd like to make known that I would like the Pit Bull Ban repealed.
Please include my email to the council meeting agenda.

Thank you.
Donna Slemmer
2612 Poe Ave
St. Louis, Mo
63114

Sent from my iPhone

Karen Goodwin

From: Michelle Yancy <stlpitbullmom@hotmail.com>
Sent: Wednesday, November 23, 2016 10:22 AM
To: Karen Goodwin
Subject: RE: To the entire City Council

My address is 9015 Tudor Ave
STL COUNTY 63114

Thank You

Get Outlook for Android

On Wed, Nov 23, 2016 at 8:48 AM -0600, "Karen Goodwin" <kgoodwin@florissantmo.com> wrote:

Hello Michelle,

Please include your address for the record so that I can include your email on the agenda.

Sincerely,
Karen

From: Michelle Yancy [mailto:stlpitbullmom@hotmail.com]
Sent: Friday, November 18, 2016 11:39 PM
To: Karen Goodwin
Subject: Fwd: To the entire City Council

Good morning,

As a St Louis County resident I would like the Florissant Pit Bull ban repealed.
I would like for you to include my email on the next city council meeting agenda. I would appreciate a reply verifying that my email has been received and will be included on the agenda.

Thank you for your time
Michelle Yancy

Get Outlook for Android

Karen Goodwin

From:	Carl Hughes <chughes_1967@yahoo.com>
Sent:	Sunday, November 20, 2016 7:16 AM
To:	Karen Goodwin
Subject:	Repeal BSL
Follow Up Flag:	Flag for follow up
Flag Status:	Flagged

To The Florissant City Council:

Please repeal the BSL. I do not wish for my tax dollars to be spent euthanizing your dogs.
Please add my request to your meeting agenda.

Thank you,
Carl Hughes
2615 Roseland Terrace
St. Louis, Mo
63143

Karen Goodwin

From: Lisa Rolens <lrolens@centralmethodist.edu>
Sent: Monday, November 21, 2016 3:42 PM
To: Karen Goodwin
Subject: Re: please include my email on the next city council meeting agenda

1240 Bobolink Dr 63031
Thank you.

From: Karen Goodwin <kgoodwin@florissantmo.com>
Sent: Monday, November 21, 2016 9:44 AM
To: Lisa Rolens
Subject: RE: please include my email on the next city council meeting agenda

Hello Lisa,

Please include your address for the record so I can include your email on the Council agenda.

Thank you,
Karen

From: Lisa Rolens [mailto:lrolens@centralmethodist.edu]
Sent: Thursday, November 17, 2016 3:13 PM
To: Karen Goodwin
Subject: please include my email on the next city council meeting agenda

To the City Council,
I am writing to request the repeal of the pit bull ban in Florissant as it is unnecessary, cruel, and costly to the community.
Please include my email on the next city council meeting agenda. Please confirm receipt of this email and verification that it will be included on the agenda.

Sincerely,

Lisa Hughes
Florissant Resident 63031

Karen Goodwin

From: cheryl genail <cgenail@hotmail.com>
Sent: Monday, November 21, 2016 12:02 PM
To: Karen Goodwin
Subject: Re: To the City Council as a whole

2000 Thrush Dr

Sent from my iPhone

On Nov 21, 2016, at 9:49 AM, Karen Goodwin <kgoodwin@florissantmo.com> wrote:

Hello Cheryl,

Please include your address for the record so I can add your email to the Council agenda.

Thank you,
Karen

From: cheryl genail [mailto:cgenail@hotmail.com]
Sent: Thursday, November 17, 2016 3:02 PM
To: Karen Goodwin
Subject: To the City Council as a whole

I am a Florissant resident and I am requesting repeal of the breed specific ban! The ban is wrong and unfair.

Please include my email on the next city council meeting agenda. I'd like a reply verifying that my email has been received and it will be included on the next agenda.

Thank you,

Cheryl Genail

Karen Goodwin

From: Hughes, Derrick D <derrick.d.hughes@boeing.com>
Sent: Monday, November 21, 2016 9:46 AM
To: Karen Goodwin
Subject: RE: Please include my email on the next city council meeting agenda

Karen,

1240 Bobolink Dr.
Florissant MO 63031

Thank you!
Derrick Hughes

Derrick D. Hughes
IMIM RFP/OTC Test Lead
Sustainment Analyst Specialist
RFP/OTC Integrated Material & Information Management
Phone: (314) 563-7441
Email: Derrick.D.Hughes@boeing.com

From: Karen Goodwin [mailto:kgoodwin@florissantmo.com]
Sent: Monday, November 21, 2016 9:43 AM
To: Hughes, Derrick D <derrick.d.hughes@boeing.com>
Subject: RE: Please include my email on the next city council meeting agenda

Hello Derrick, Please include your address for the record so I can include your email on the council agenda.

Thank you,
Karen

From: Hughes, Derrick D [mailto:derrick.d.hughes@boeing.com]
Sent: Thursday, November 17, 2016 4:17 PM
To: Karen Goodwin
Subject: Please include my email on the next city council meeting agenda

To the City Council,
I am writing to request the repeal of the pit bull ban in Florissant as it is unnecessary, cruel, and costly to the community.
Please include my email on the next city council meeting agenda. Please confirm receipt of this email and verification that it will be included on the agenda.

Sincerely,

Derrick Hughes
Florissant Resident 63031

Karen Goodwin

From: Margaret Mullenschlader <pmullensch@sbcglobal.net>
Sent: Monday, November 21, 2016 6:03 AM
To: Karen Goodwin
Subject: BSL

Follow Up Flag: Follow up
Flag Status: Flagged

To the Council as a whole.I am writing to ask you to repel the BSI. Karen if you would include this in the Communications part of the meeting also.

Thank you
Peggy Mullenschlader
1275 Sandy Dr
Florissant Mo

P.S. Karen would you please let me know you received this. Thanks Sent from my iPhone

CITY OF FLORISSANT

PUBLIC HEARING NOTICE

A Public Hearing will be held by the Florissant City Council in the Council Chambers, 955 rue St. Francois, Florissant, MO., on Tuesday, September 27, 2016 at 7:30 p.m. on the following proposition, to-wit:

To rezone for Lyons Properties, LLC d/b/a Dunkin Donuts for the property located at 8115 N. Lindbergh from B-3, Extensive Commercial District to B-5, Planned Commercial District to allow for the construction of a new building.

Citizens will have an opportunity to be heard. Anyone with special needs should contact the City Clerk at least 5 days before said public hearing by calling 839-7630 or TDD 839-5142.

CITY OF FLORISSANT, Karen Goodwin, City Clerk MMC.

MEMORANDUM

CITY OF FLORISSANT- BUILDING DEPARTMENT

"Preserve and improve the health, safety, and welfare of our residents, businesses and the general public in the City of Florissant; while at the same time maintaining property values and improving the quality of life in the City of Florissant."

To: Planning and Zoning Commissioners Date: July 27, 2016 **rev. 8/31/16**

From: Philip E. Lum, AIA-Building Commissioner c: Louis B. Jearls, Jr. - P.E.,
PWLF Director Public Works
Deputy City Clerk
Applicant
File

Subject: Request Recommended Approval of a **Rezoning to a 'B-5' at 8115 N. Lindbergh, Dunkin Donuts,** in an existing 'B-3' Zoning District.

STAFF REPORT
CASE NUMBER PZ-080116-2

I. PROJECT DESCRIPTION:

The request before the commission is to rezone the property located at 8115 N. Lindbergh from the 'B-3' Extensive Business District to a'B-5' Planned Commercial District to allow for the development of a sit-down, carryout restaurant with drive-up service. The property is approximately 0.47 acres. The proposed building will be 2,000 square feet.

BUILDING DESIGN:

The exterior of the building is proposed to be constructed of brick, cement siding and EIFS.

PARKING, DRIVEWAYS AND STACKING:

There are 14 parking spaces proposed, 9 feet wide by 19 feet long. Parking spaces will be provided primarily on the north side of the property. There is a dual drive proposed around the West and South sides of the building. One is a drive- up order lane and the other is a bypass lane. The drive up area shown contains 1 vehicle at the window and 6 vehicles stacked per code. There is a curb cut onto the highway and one right-out curb cut shown with shared access. Connection has been cut off between this property and the adjacent gas station as shown. The curb cut on the property is shown about 35 feet wide.

WALKWAYS:

There are no new proposed, however, front walkway in accord with the Lindbergh Improvement Program is existing and is shown to remain.

LANDSCAPING:

The Lindbergh Improvement Program plantings shown **outside the property lines,** There are landscaped areas at the corners of the main parking area. There are 100 shrubs shown. The perimeter of the building appears to contain a planting bed on the south and west sides of the building with no shrubs. Since the building is about 65x35, the required number of shrubs for building planting is about 40, also 3 frontage trees are required and 0 landscaped islands. **Sheet 1 of 1 shows 12 ornamental trees.** Therefore the proposed plan **exceeds** ~~is short of~~ the requirements. ~~for landscape without counting the Lindbergh Improvement Program area, again shown on the property with an additional 24 burning bush and 2 frontage trees. With the frontage plantings, the plan will comply.~~

STORMWATER AND SANITARY SEWER:

The proposed storm water management is now shown as inlets on the Sheet 1 of 1.

SITE LIGHTING:

As indicated on Sheet SP-2.0, There are 5 light poles provided on the site. The Photometric drawing indicates the light level range on site.

SIGNAGE:

The proposal includes a new **post** sign ~~17 feet~~ 23 **from** the property line, **33.6 feet from the curb. Two** directional signs are shown at 4'-10" high, **not near the property line (one has been omitted).** There will also be a menu board for the drive up order lane. There will also be wall signs at 10 feet tall x8.5 feet wide=85 s.f.x 0.67= 57 s.f.

II. EXISTING SITE CONDITIONS:

The property is currently a vacant building to be removed and parking area which also must undergo demolition. The applicant has reviewed the project with MoDOT.

III. SURROUNDING PROPERTIES:

The property to the west 855 Southwell and three properties to the south, 860, 870 and 890 Loyola are zoned 'R-4' a single family residential. **The property to the NE is 8123 N. Lindbergh, in a 'B-3' Zoning District.**

IV. STAFF ANALYSIS:

The building is not in compliance with the masonry ordinance. Instead, the petitioner proposes consideration of specific areas of cement siding that does have long lifespan and EIFS. It is shown on the plans that a trash enclosure is proposed no material is called out. The height of the building is a maximum of twenty one feet three inches in height.

The parking **calculations are shown on 1 of 1, compliant with** ordinance #8044 adopted 5/27/14 as well as the parking lot landscaping, which states:

> *1 space for every 2 seats plus 2 spaces for every 3 employees on the maximum shift and 5 stacking plus 1 at order station*

~~Therefore, the drive-through complies, however, parking calculations would need to indicate the number of seating.~~

The site plan indicates a cross access easement with the car lot at the right out entrance of the gas station

Because this is a 'B-5' adjacent to residential districts, the zoning code requires screening. There will be a need to screen this property from the adjacent residentially zoned property to the south and west. A 6' **vinyl** fence is shown along these property lines. ~~The zoning code will require a heavy duty vinyl privacy fence.~~

Because this property is not over one acre, an irrigation system is not required per section 405-250 of the zoning code.

The proposal includes locating one directional sign to within ten feet of the North Lindbergh property line.

VI. STAFF RECOMENDATIONS:

1. Subject to Council Approval, that all exterior walls be constructed of masonry per section 500.040 of the City Code or that P&Z endorse exterior materials with a service life of 50 years minimum and consider a change in this section of Zoning Code.

SEPT 6 2016

~~July 27, 2016~~ Suggested Motion:

I move to recommend approval to rezone **8115 N. Lindbergh, Dunkin Donuts** from 'B-3' to a 'B-5' Planned Commercial District to allow a sit-down, carryout

and drive-thru restaurant subject to the conditions set forth below with these conditions being part of the record:

~~2. All exterior walls be constructed of masonry per section 500.040 of the City Code.~~
~~3. Parking shall be based upon 'x' employees and 'x' customer seating.~~
~~[illegible] SET BACK - LINE [illegible]~~
(2) 23' OFF PROP LINE SIGN

1. **PERMITTED USES**

The use permitted in this 'B-5' Planned Commercial District shall be limited to a sit down, carry out and drive-thru restaurant.

2. **FLOOR AREA, HEIGHT AND BUILDING REQUIREMENTS**

The building space shall be limited to a single story **2,000** square foot building with uses permitted within the B-3 "Extensive Business District" without a Special Permit.

3. **PERFORMANCE STANDARDS**

In addition to all other requirements, uses within the "B-5" Planned Commercial District shall conform to the most restrictive performance standards as follows:

1. Vibration. Every use shall be so operated that the maximum ground vibration generated is not perceptible without instruments at any point on the lot line of the lot on which the use is located.
2. Odor. Every use shall be so operated that no offensive or objectionable odor is perceptible at any point on the lot line on which the use is located.
3. Smoke. Every use shall be so operated that no smoke from any source shall be emitted of a greater density than the density described as No. 1 on the Ringelmann Chart as published by the United States Bureau of Mines.
4. Toxic gases. Every use shall be so operated that there is no emission of toxic, noxious or corrosive fumes or gases.
5. Emission of dirt, dust, fly ash and other forms of particulate matter. Emission of dirt, dust, fly ash and other forms of particulate matter shall not exceed eighty-five one-hundredths (0.85) pounds per one thousand (1,000) pounds of gases of which amount not to exceed five-tenths (0.5) pound per one thousand (1,000) pounds of gases shall be of such size as to be retained on a 325-mesh U.S. standard sieve. In the case of emission of fly ash or dust from a stationary furnace or a combustion device, these standards shall apply to a condition of fifty percent (50%) excess air in the stack at full load, which standards shall be varied in proportion to the deviation of the percentage of excess air from fifty percent (50%).
6. Radiation. Every use shall be so operated that there is no dangerous amount of radioactive emissions.

7. Glare and heat. Any operation producing intense glare or heat shall be performed in an enclosure in such a manner as to be imperceptible along any lot line.

8. Screening.

a. All mechanical equipment, air-handling units, cooling towers, condensers, etc., on roof or grade shall be screened architecturally in such a manner as to be a part of the design of the building.

b. Incinerators and stacks shall be enclosed in the same material as the main exterior building material.

4. **TRASH ENCLOSURES**

Trash container shall be kept within a **metal gated** sight-proof fenced area.

5. **PLAN SUBMITTAL REQUIREMENTS**

A final site development plan shall be submitted to the Building Commissioner to review for compliance to this ordinance and other city ordinances prior to issuance of land disturbance permits or building permits. Final Development Plan shall include improvements as shown on Drawings **SP-1.0, SP-2.0 & A-5.0 by Reinhardt & Associates, Architects all dated 11/13/15 general revisions, and Sheet 1 of 2 and 2 of 2 dated 8/30/16 by Pickett, Ray & Silver, Inc.**

3. **SITE DEVELOPMENT PLAN CRITERIA:**

a. Height, Area And Bulk Restrictions:

1. Height, Area And Bulk Regulations. The height, area and bulk regulations for uses in the "B-3" Extensive Commercial District

2. **There shall be a zero feet setback line abutting the adjacent commercial property to the northeast.**

b. Internal Drives:

(1) There shall be parking to be indicated on the Final Development Plan.

c. Minimum Parking/Loading Space Requirements.

(1) There shall be a minimum of **15 parking spaces** provided on the property.

d. Road Improvements, Access and Sidewalks

Final Development shall include Lindbergh Improvement Plan enhancements along the frontage.

e. Lighting Requirements.

Lighting of the property shall comply with the following standards and requirements:

(1) The light level for parking lot lighting shall be 0.5 fc minimum as indicated on **SP-2.0 attached.**

(2) All site lighting and exterior building lighting shall be directed down and inward.

f. Sign Requirements.

AS HERE IN AMENDED AND

(1) **There shall be one post sign, wall signs as shown on A-5.0 and two directional signs as shown located on the SP-1.0 Plan attached.**

(2) All other signage shall comply with the City of Florissant sign ordinance for commercial districts.

g. Landscaping and Fencing.

(1) Landscaping indicated on the Final Development Plan **shall be as shown on the attached sheet 1 of 1.**

(2) Any modifications to the landscaping shall be reviewed and approved by the Planning and Zoning Commission.

h. Storm Water.

Storm Water and drainage facilities shall comply with the following standards and requirements:

(1) The Director of Public Works shall review the storm water plans to assure that storm water flow will have no adverse affect the neighboring properties.

(2) No building permits shall be issued until the storm water plan has been approved by the St. Louis Metropolitan Sewer District.

i. Miscellaneous Design Criteria.

(1) All applicable parking, circulation, sidewalks, and all other site design features shall comply with the Florissant City Code.

(2) All dumpsters and grease containers shall be contained within a trash enclosure with gates, compatible with existing building.

(3) All storm water and drainage facilities shall be constructed, and all landscaping shall be installed, prior to occupancy of the building, unless remitted by the Director of Public Works due to weather related factors.

(4) All mechanical equipment, electrical equipment, and communication equipment shall be screened in accordance with the Florissant Zoning Code.

(5) The exterior design of the buildings shall be constructed in accordance with the renderings as approved by the Florissant Planning and Zoning Commission and attached hereto.

(6) All other requirements of the Florissant Municipal Code and other ordinances of the city shall be complied with unless otherwise allowed by this ordinance.

7. FINAL SITE DEVELOPMENT PLAN

A final site development plan shall be submitted to the Building Commissioner to review for compliance with the applicable "B-5" Planned Commercial Development ordinance prior to recording. Any variations from the ordinance approved by the City Council and/or the conceptual plans attached to such ordinance shall be processed in accordance with the procedure established in the Florissant Zoning Code.

8. AMENDMENTS TO THE SITE AND EXTERIOR BUILDING PLANS:

Any changes to the approved plans attached hereto must be reviewed by the Building Commissioner. The Building Commissioner must make a determination as to the extent of the changes per the following procedure:

1. The property owner or designate representative shall submit in writing a request for an amendment to the approved plans. The building commissioner shall review the plans for consistency with the purpose and content of the proposal as originally or previously advertised for public hearing and shall make an advisory determination.
2. If the building commissioner determines that the requested amendment is not consistent in purpose and content with the nature of the purpose as originally proposed or previously advertised for the public hearing, then an amendment to the special use permit shall be required and a review and recommendation by the planning and zoning commission shall be required and a new public hearing shall be required before the City Council.
3. If the building commissioner determines that the proposed revisions are consistent with the purpose and content with the nature of the public

hearing then a determination of non-necessity of a public hearing shall be made.

4. Determination of minor changes: If the building commissioner determines that an amendment to the special use permit is not required and that the changes to the plans are minor in nature the Building Commissioner may approve said changes.
5. Determination of major changes: If the Building Commissioner determines that an amendment to the B-5 is not required but the changes are major in nature, then the owner shall submit an application for review and approval by the Planning and Zoning commission.

9. **VERIFICATION PRIOR TO OCCUPANCY PERMIT**
   a. Any new roadway improvements shall be completed prior to the issuance of any final occupancy permit.

   b. Any new stormwater detention shall be completed prior to the issuance of any occupancy permit.

   c. All fencing and/or landscaping intended as screening properties shall be completed prior to the issuance of any occupancy permit, unless remitted by the Director of Public Works due to weather related factors.

10. **GENERAL DEVELOPMENT CONDITIONS.**
   a. Unless, and except to the extent, otherwise specifically provided herein, development shall be effected only in accordance with all ordinances of the City of Florissant.

   b. The Department of Public Works shall enforce the conditions of this ordinance in accordance with the Final Site Development Plan approved by the Planning & Zoning Commission and all other ordinances of the City of Florissant.

9. **PROJECT COMPLETION.**
   Construction shall start within 90 days of the issuance of building permits for the project and shall be developed in accordance of the approved final development plan within 12 months of start of construction.

(End of report and suggested motion **8/31/16**)

FLORISSANT PLANNING & ZONING COMMISSION APPLICATION

City Of Florissant – Public Works
314-839-7648

Application is hereby made to the Building Commissioner of the Department of Public works Office at the City of Florissant, Missouri, to appear before the Planning & Zoning Commission

Please Print or Type The Following Information

Property Address: 8115 N Lindbergh Blvd., Florissant, MO 63031

Property Owners Name: Lampe, LP Phone #:

Property Owners Address: 30 Westwood Country Club - St. Louis MO 63131

Business Owners Name: Phone #:

Business Owners Address:

DBA (**Doing Business As**) Dunkin Donuts

Authorized Agents Name: Tim Kaufmann CO. Name: Lyons Group
(Authorized Agent to Appear Before The Commission)

7/28/16 New Address #4 Willow Hill Rd St. Louis MO 63124
Agents Address: ~~Rio Vista Dr St. Louis MO 63124~~ Phone #: 314-280-2540

Request Change of Zoning to B5. From B-3 to Allow New building.
State complete request (print or type only).

IF A TRAFFIC STUDY IS REQUIRED FOR CERTAIN DEVELOPMENTS AND USES THE COST OF THE TRAFFIC STUDY SHALL BE PAID BY THE APPLICANT. PLEASE SUBMIT FOLDED PLANS

Applicant's Signature **Date** 7-18-16

OFFICE USE ONLY

Received by: RD Receipt # 593165 Amount Paid: 125 Date: 7/18/16

STAFF REMARKS:

DATE APPLICATION REVIEWED:

SIGNATURE OF STAFF WHO REVIEWED APPLICATION

COMMISSION ACTION TAKEN:

RECOMMENDED APPROVAL
PLANNING & ZONING
CHAIRMAN
SIGN.
DATE: 9/6/2016

7-12-2016

Lampe, LP
30 Westwood Country Club
Saint Louis, MO 63131

Subject: Rezoning of 8115 N. Lindbergh Blvd.

Tim:

Pursuant to your request Lampe, LP hereby gives permission for Tim Kaufmann dba Lyons Properties, LLC to act as Owner's agent in rezoning of the parcels known as 8115 and 8115A N. Lindbergh Blvd. Florissant, MO 63031.

Sincerely,

Jack Lampert

Jack Lampert
Principal
Lampe, LP

APPLICATION TO THE CITY OF FLORISSANT PLANNING AND ZONING COMMISSION TO ESTABLISH A B-5 PLANNED COMMERCIAL DISTRICT

PLANNING & ZONING ACTION:

X RECOMMENDED APPROVAL
PLANNING & ZONING
CHAIRMAN
SIGN. DATE: 9/6/2016

Address of Property:

8115 N. Lindbergh Blvd.

Council Ward 3 Zoning B3

Initial Date Petitioner Filed_____
Building Commissioner to complete ward, zoning & date filed

PETITION FOR A B-5 RE-ZONING:

1) Comes Now Lyons Properties LLC
(Individual's name, corporation, partnership, etc.)
Enter name of petitioner. If a corporation, state as such. If applicable include DBA (Doing Business As).

and states to the Planning and Zoning Commission that he (she) (they) has (have) the following legal interest in the tract of land located in the City of Florissant, State of Missouri, described on page 3 of this petition.

Legal interest in the Property owner under contract
State legal interest in the property. (i.e., owner of property, lease); also submit copy of deed or lease or letter of authorization from owner to seek a special use.

A. The petitioner (s) hereby states that he (she) (they) is (are) submitting a description of the property for which the Permit is petitioned by giving bearings & distances (metes and bounds). Not required if description is identical to "B".

B. The petitioner (s) hereby states that he (she) (they) is (are) submitting a survey or plat of the property drawn to a scale of 100 feet or less to the inch, referenced to a point easily located on the ground as street intersection, centerline of creek having a generally known name, etc., showing dimensions, bearings and distances of the property, north arrow and scale.

C. Acreage to nearest tenth of an acre of the property for which rezoning is petitioned 0.47 Acres

2. The petitioner(s) hereby further state(s) that the property herein described in this petition is presently zoned in a B3 District and is presently being used for: Car stereo sales and installation.

State current use of property, (or, state: vacant).

3. The petitioner(s) hereby state(s) the following purpose to justify the re-zoning to a B-5:
To allow construction of Dunkin Donuts restaurant.

List purpose for this request.

4. The petitioner(s) further states(s) that they (he) (she) can comply with all of the requirements of the City of Florissant, including setback lines and off-street parking.

5. The petitioner(s) further state(s) that they (he) (she) further represent(s) and warrants that they (he) (she) has (have) not made any arrangement to pay any commission, gratuity or consideration, directly or indirectly, to any official employee or appointee of the City of Florissant, with respect to this application.

PRINT PETITIONER'S NAME Tim Kaufmann
Print Name

PETITIONER(S) SIGNATURE (S) _____

FOR Lyons Properties
(company, corporation, partnership)

Print and sign application. If applicant is a corporation or partnership signature must be a CORPORATE OFFICER or LLC Managing PARTNER. NOTE: Corporate officer is an individual named in corporate papers.

6. I (we) hereby certify that (indicate one of the following):
( ) I (we) have a legal interest in the herein above described property.
(X) I am (we are) the duly appointed agent(s) of the petitioner (s), and that all information given here is true and a statement of fact.

Petitioner may assign an agent to present petition to the Commission and Council. The agent must sign the petition in this section, and provide address and telephone number

SIGNATURE _____

ADDRESS 8 Rio Vista Dr. Saint Louis MO 63124
STREET CITY STATE ZIP CODE

TELEPHONE NUMBER 314-280-2540
BUSINESS

I (we) the petitioner (s) do hereby appoint Tim Kaufmann as
Print name of agent.
my (our) duly authorized agent to represent me (us) in regard to this petition.

_____
Signature of Petitioner(s) or Authorized Agent

NOTE: Be advised when the petitioner and/or his duly authorized agent appears before the Planning and Zoning Commission and make the presentation, the same individuals must also appear before the City Council for that presentation. Also if the descriptions of plats or surveys are incorrect, or if the petition form is not correctly and completely filled out it will be returned for corrections and may have to be re-submitted.

Please check the box for the appropriate type of operation then fill in applicabe section (a), (b) or (c). Corporations are to submit copy of Missouri corporate papers with registration papers.

1) Type of Operation: Individual: [ ] Partnership: [ ] Corporation/LLC: [X]

(a) If an Individual:

(1) Name and Address _____

(2) Telephone Number _____

(3) Business Address _____

(4) Date started in business _____

(5) Name in which business is operated if different from (1) _____

(6) If operating under a fictitious name, provide the name and date registered with the State of Missouri, and a copy of the registration.

(b) If a Partnership:

(1) Names & addresses of all partners _____

(2) Telephone numbers _____

(3) Business address _____

(4) Name under which business is operated _____

(5) If operating under fictitious name, provide date the name was registered with the State of Missouri, and a copy of the registration.

(c) If a Corporation or LLC:

(1) Names & addresses of all partners Tim Kaufmann (8 Rio Vista Dr. 63124)

(2) Telephone numbers 314-280-2540

(3) Business address 8 Rio Vista Dr. St. Louis, MO 63124

(4) State of corporation & a photocopy of incorporation papers MO

(5) Date of corporation 10-21-14

(6) Missouri Corporate Number LC 001422693

(7) If operating under fictitious name, provide the name and date registered with the State of Missouri, and a copy of registration. _____

(8) Name in which business is operated _____

(9) If the property location is in a strip center, give dimensions of your space under square footage and do not give landscaping information.

Please fill in applicable information requested.

Name _____

Address _____

Property Owner _____

Location of property 8115 N Lindbergh Blvd., Florissant, MO 63031

Dimensions of property See Plan

Current Use of Property Car Stereo Sales and Installation

Proposed Use of Property Coffee and Donut Restaurant

Type of Sign _____ Height _____

Type of Construction Brick masonry & Concrete Brd. Number Of Stories One

Square Footage of Building 2,000 sf Number of Curb Cuts One

Number of Parking Spaces Fourteen Sidewalk Length _____

Landscaping: No. of Trees _____ Diameter _____

No. of Shrubs _____ Size _____

Fence: Type Vinyl or as Recommended Length 302.5 Feet Height 6 Feet

PLEASE SUBMIT NINE (9) FOLDED COPIES OF THE FOLLOWING:

1. Plan or drawing showing zoning of adjoining properties.
2. Plan or drawing showing location of property in relation to major streets and all adjoining properties.
3. Drawing showing measurement of tract and overall area of tract.
4. Plan or drawing showing proposed parking layout, landscaping, parking lighting, signage and trash enclosure.

CITY OF FLORISSANT

Public Hearing

In accordance with 405.310 of the Florissant Zoning Code a Public Hearing will be held by the City Council of Florissant, MO. in the Council Chambers, 955 Rue St. Francois, on Monday, November 28, 2016 at 7:30 P.M. on the following proposition:

To authorize an amendment to Special Permit No. 7952, as transferred from Ordinance No. 6161, to Global Signal Acquisitions II, LLC d/b/a Crown Castle to allow for additional antennas on existing disguised tower pole for the property located at 62 Grandview Plaza Shopping Center (legal description to govern). Citizens will have an opportunity to be heard. Anyone with special needs should contact the City Clerk at least 5 days before said public hearing by calling 839-7630 or TDD 839-5142.

CITY OF FLORISSANT, Karen Goodwin, MMC City Clerk

FLORISSANT PLANNING & ZONING COMMISSION APPLICATION

City Of Florissant – Public Works
314-839-7648

Application is hereby made to the Building Commissioner of the Department of Public works Office at the City of Florissant, Missouri, to appear before the Planning & Zoning Commission

Please Print or Type The Following Information

Property Address: 62 Grandview Plaza

Property Owners Name: Broadway Sycamore Partners, LLC Phone #: _____

Property Owners Address: 3415 S Sepulveda Blvd. Suite 400 Los Angeles, CA 90034

Business Owners Name: Global Signal Acquisitions II, LLC /Crown Castle as tower owner Phone #: (314) 569-3715

Business Owners Address: 1 City Place Dr. Suite 490 St. Louis, MO 63141

DBA **(Doing Business As)** _____

Authorized Agents Name: Jeff Barnett c/o Global Signal Acquistions II & Crown Castle CO. Name: Global Signal Acquistions II & Crown Castle as Tower Owner
(Authorized Agent to Appear Before The Commission)

Agents Address: 1 City Place Dr. Suite 490 St. Louis, MO 63141 Phone #: (314) 569-3715

Request Amend Special Use Permit #7952 to allow for additional antennas on existing pole.

State complete request (print or type only).

IF A TRAFFIC STUDY IS REQUIRED FOR CERTAIN DEVELOPMENTS AND USES THE COST OF THE TRAFFIC STUDY SHALL BE PAID BY THE APPLICANT. PLEASE SUBMIT FOLDED PLANS

Jeff Barnett
Applicant's Signature

10-25-16
Date

OFFICE USE ONLY

Received by: CL Receipt # 594757 Amount Paid: 125 Date: 10/25/16

STAFF REMARKS: _____

DATE APPLICATION REVIEWED: _____

SIGNATURE OF STAFF WHO REVIEWED APPLICATION

COMMISSION ACTION TAKEN:

RECOMMENDED APPROVAL
PLANNING & ZONING
CHAIRMAN

SIGN. DATE: 11/7/2016

Planning & Zoning Application
Page 1 of 1 – Revised 9/28/10

SPECIAL USE PERMIT APPLICATION
TO THE CITY OF FLORISSANT
PLANNING AND ZONING COMMISSION

City Of Florissant – Public Works
314-839-7648

PLANNING & ZONING ACTION
RECOMMENDED APPROVAL
PLANNING & ZONING
CHAIRMAN

SIGN. DATE: 11/07/2016

Council Ward _____ Zoning _____

Initial Date Petitioner Filed_____
Building Commissioner to complete ward, zone & date filed

SPECIAL PERMIT FOR _____
Statement of what permit is being sought. (i.e., special permit for operation of a restaurant.

AMEND SPECIAL PERMIT #- 7952 TO ALLOW FOR additional antennas on existing pole
ordinance # **Statement of what the amendment is for.**

LOCATION 62 Grandview Plaza
Address of property.

1) Comes Now Crown Castle DBA Global Signal Acquisitions II, LLC
Enter name of petitioner. If a corporation, state as such. If applicable include DBA (Doing Business As)

and states to the Planning and Zoning Commission that he (she) (they) has (have) the following legal interest in the tract of land located in the City of Florissant, State of Missouri, as described on page 3 of this petition.

Legal interest in the Property) Leasee
State legal interest in the property. (i.e., owner of property, lease.
Submit copy of deed or lease or letter of authorization from owner to seek a special use.

2) The petitioner(s) further state(s) that the property herein described is presently being used for Wireless Communications Facility and that the deed restrictions for the property do not prohibit the use which would be authorized by said Permit.

3) The petitioner(s) further states (s) that they (he) (she) are submitting a detailed site plan of the proposed or existing development showing location and use of all structures, off-street parking, and all other information required by the Zoning Ordinance or determined necessary by the Building Commissioner.

4) The petitioner(s) further state(s) that (he) (she) (they) can comply with all of the requirements of the City of Florissant, including setback lines and off- street parking.

5) The petitioner (s) further (represent (s) and warrants (s) that they (he) (she) has (have) not made any arrangement to pay any commission gratuity or consideration, directly or indirectly to any official, employee or appointee of the City of Florissant, with respect to this application.

6) The petitioner(s) further state (s) that the Special Use Permit is sought for the following purposes, and no other, List in detail, all activities sought to be covered by the permit (i.e.; operation of a business, approval of building and / or site plans (preliminary and / or final), plan approval for sign, etc.):

7) The petitioner (s) state (s) the following factors and reason to justify the permit:
(If more space is needed, separate sheets maybe attached)

Jeff Barnett
PRINT NAME

Jeff Barnett / 10/25/16
SIGNATURE

FOR Global Signal Acquisitions II, LLC
(company, corporation, partnership)

Print and sign application. If applicant is a corporation or partnership signature must be a CORPORATE OFFICER or a PARTNER. NOTE: Corporate officer is an individual named in corporate papers.

8) I (we) hereby certify that (indicate one of the following):

(X) I (we) have a legal interest in the herein above described property.

( ) I am (we are) the duly appointed agent(s) of the petitioner (s), and that all information given here is true and a statement of fact.

Petitioner may assign an agent to present petition to the Commission and Council. The agent must sign the petition in below, and provide address and telephone number

SIGNATURE _____

ADDRESS 1 City Place Dr. Suite 490 St. Louis MO 63141
STREET **CITY** **STATE** **ZIP CODE**

TELEPHONE NUMBER (314) 569-3715
BUSINESS

I (we) the petitioner (s) do hereby appoint _____ as
Print name of agent.
my (our) duly authorized agent to represent me (us) in regard to this petition.

_____
Petitioner or authorized agent's signature

NOTE: When the petitioner and/or his duly authorized agent appears before the Planning and Zoning Commission and to make a presentation, the same individuals must also appear before the City Council at the Public Hearing to make the presentation and no one else will be permitted to make the presentation to the City Council.

IF DESCRIPTIONS OF PLATS OR SURVEYS ARE INCORRECT, OR IF THE PETITION FORM IS NOT CORRECTLY AND COMPLETELY FILLED OUT, IT WILL BE RETURNED FOR ADDITIONS OR CORRECTIONS AND WILL HAVE TO BE RE-SUBMITTED.

REQUIRED INFORMATION

Please mark an "X" in the appropriate type of operation then fill in applicabe section (a), (b) or (c). Corporations are to submit copy of Missouri corporate papers with registration papers.

1) Type of Operation:
Individual _____ Partnership _____ Corporation X

(a) If an individual:

(1) Name and Address _____

(2) Telephone Number _____

(3) Business Address _____

(4) Date started in business _____

(5) Name in which business is operated if different from (1) _____

(6) If operating under a fictitious name, provide the name and date registered with the State of Missouri, and a copy of the registration.

(b) If a partnership:

(1) Names & addresses of all partners _____

(2) Telephone numbers _____

(3) Business address _____

(4) Name under which business is operated _____

(5) If operating under fictitious name, provide date the name was registered with the State of Missouri, and a copy of the registration.

(c) If a corporation:

(1) Names & addresses of all partners Jay Brown-Pres/CEO, Dan Schlanger SVP/CFO, Jim Young SVP/COO 1220 Augusta Dr, Suite 500 Houston, TX 77507

(2) Telephone numbers (713) 570-3000

(3) Business address 1220 Augusta Dr. Suite 500, Houston, TX 77507

(4) State of Incorporation & a photocopy of incorporation papers Delaware

(5) Date of Incorporation 03/11/2005

(6) Missouri Corporate Number FL0653127

(7) If operating under fictitious name, provide the name and date registered with the State of Missouri, and a copy of registration. _____

(8) Name in which business is operated Global Signal Acquistions II LLC

(9) Copy of latest Missouri Anti-Trust. (annual registration of corporate officers) If the property location is in a strip center, give dimensions of your space under square footage and do not give landscaping Information.

Please fill in applicable information requested. If the property is located in a strip center, give the dimensions of your space under square footage and do not give landscaping information.

Name Grand View Plaza

Address 1491 Grandview Plaza

Property Owner Broadway Sycamore Partners, LLC

Location of property 62 Grandview Plaza

Dimensions of property 30ft x 40ft

Property is presently zoned _____ Requests Rezoning To _____

Proposed Use of Property _____

Type of Sign _____ Height _____

Type of Construction _____ Number Of Stories. _____

Square Footage of Building _____ Number of Curb Cuts _____

Number of Parking Spaces _____ Sidewalk Length _____

Landscaping: No. of Trees _____ Diameter _____

No. of Shrubs _____ Size _____

Fence: Type _____ Length _____ Height _____

PLEASE SUBMIT THE FOLLOWING:

1. Plan or drawing showing zoning of adjoining properties.
2. Plan or drawing showing location of property in relation to major streets and all adjoining properties.
3. Drawing showing measurement of tract and overall area of tract.
4. Plan or drawing showing proposed parking layout, landscaping, parking lighting and trash enclosure.
5. If Special Permit is for a sign show location of sign on plot plan.

PROVIDE LEGAL DESCRIPTION OF PROPERTY PERTAINING TO THIS PETITION

(Close legal description with acreage to the nearest tenth of an acre).

Provide a legal description of the property. If part of a shopping center list address and state part of what shopping center (i.e.: 351 N. Highway 67 part of Florissant Meadows Shopping Center). If property is a single lot, list full written legal description with bearings and distances.

PROVIDE LOCATION MAP SHOWING AREA INVOLVING THIS PETITION

Provide a drawing of a location map showing the nearest major intersection.

OFFICE USE ONLY

Date Application reviewed _____

STAFF REMARKS: _____

_____

_____

_____

_____

Building Commissioner or Staff Signature

INTRODUCED BY COUNCILMAN PAGANO
FEBRUARY 11, 2013

BILL NO. 8898

ORDINANCE NO. 7952

AN ORDINANCE TRANSFERRING SPECIAL USE PERMIT NO. 6161 FROM BRADLEY OPERATING LP TO GLOBAL SIGNAL ACQUISITIONS II, LLC FOR THE OPERATION OF A CELLULAR COMMUNCIATIONS TOWER LOCATED AT 62 GRANDVIEW PLAZA SHOPPING CENTER.

WHEREAS, the Florissant Zoning Ordinance authorizes the Council of the City of Florissant, by Special Use Permit, after public hearing thereon, to permit the location and operation of a cellular tower; and

WHEREAS, pursuant to Ordinance No. 6161, Bradley Operating LP was granted a Special Use Permit for the location and operation of cellular tower located at 62 Grandview Plaza Shopping Center; and

WHEREAS, an application has been filed by Global Signal Acquisitions II, LLC to transfer the Special Use Permit authorized by Ordinance No. 6161 to its name; and

WHEREAS, the City Council of the City of Florissant determined at its meeting on February 11, 2013 that the business operated under Ordinance No. 6161 would be operated in a substantially identical fashion as set out herein; and

WHEREAS, Global Signal Acquisitions II, LLC has accepted the terms and conditions set out in Ordinance No. 6161.

NOW, THEREFORE, BE IT ORDAINED BY THE COUNCIL OF THE CITY OF FLORISSANT, ST. LOUIS COUNTY, MISSOURI, AS FOLLOWS:

Section 1: The Special Use Permit authorized by Ordinance No. 6161 is hereby transferred from Bradley Operating LP, to Global Signal Acquisitions II, LLC for the location and operation of a Cellular Communication Tower.

Section 2: The terms and conditions of said Special Permit authorized by Ordinance No. 6161 shall remain in full force and effect.

Section 3: The Special Use Permit herein authorized shall terminate if the said business ceases operation for a period of more than ninety (90) days or when the named permittee ceases to be the owner and operator of said business.

Section 4: This ordinance shall become in force and effect immediately upon its passage and approval.

Adopted this 25 day of Feb, 2013.

Keith Schildroth
President of the Council
City of Florissant

Approved this 26 day of Feb, 2013.

Thomas P. Schneider
Mayor, City of Florissant

ATTEST:

Karen Goodwin, MMC/MRCC
City Clerk

MEMORANDUM

CITY OF FLORISSANT

"Preserve and improve the health, safety, and welfare of our residents, businesses and the general public in the City of Florissant; while at the same time maintaining property values and improving the quality of life in the City of Florissant."

To: Planning and Zoning Commissioners Date: October 31, 2016

From: Philip E. Lum, AIA-Building Commissioner cc: Louis B. Jearls, Jr. PE-PWLF
Director of Public Works
Applicant
File

Subject: Request Recommended Approval to amend a Special Use to allow for additional equipment at 62 Grnadview in an 'B-5' Zoning District.

STAFF REPORT
CASE NUMBER PZ-110716-1

I. PROJECT DESCRIPTION:

This is a request for Recommended Approval to amend a Special Use to allow for additional equipment at 62 Grandview in an 'B-5' Zoning District.

II. EXISTING SITE CONDITIONS:

The existing property at 62 Grandview is owned by Broadway Sycamore Partners LLC, et al, who are new owners of the shopping center. Communication has begun with the new owners for improvements. The property is inscribed within the shopping center.

The site has a paved parking lot and associated buildings dating back to 1962.

The subject buildings on the property include some 36,162 square feet. An existing shopping center sign is in the front yard area.

No new parking is proposed, however, the owner has been informed of the overage of parking available.

III. SURROUNDING PROPERTIES:

The property surrounding the shopping center to the North and East are apartments in the Multi-Family Dwelling District, and the property to the West is Uncle Bob's Storage in a 'B-5' District.

IV. STAFF ANALYSIS:

The application is accompanied by T-1, T-2, C-1, C-2, C-3, G-1, G-2 completed by Crown Castle, plans dated 10/5/16.

Height of antennae support structures. Any antennae support structure which is proposed to be in excess of one hundred (100) feet would exceed the limit without involving specialized consultant report submission. The height of the existing tower is 100 feet.

Drawing C-1 indicates new Sprint feed lines to the disguised tower.
Drawing C-2 and C-3 indicate new equipment clamped onto the flagpole at a height of 77 feet o.c. The top of the new antennae is noted at 1'-9" above the center. This report assumes the height of the new anntannae are 3'-6", exposed below the flag, color of new equipment is unknown.

Staff has determined that this proposal shall require the applicant to obtain a Special Use Permit from the Council. The applicant is required to meet the requirements of a Special Use Permit under Section 405.240:

"SECTION 405.240:COMMUNICATION ANTENNAE AND SUPPORT STRUCTURES
A.General Requirements. The requirements set forth in this Section shall be applicable to all antennae and support structures installed, built or modified after July 13, 1998.

1.Building codes and safety standards. To ensure the structural integrity of antennae support structures, the owner shall see that it is constructed and maintained in compliance with all standards contained in applicable State and local Building Codes and the applicable industry standards including the latest version of TIA/EIA.

2.Regulatory compliance. All antennae and support structures shall meet or exceed current standards and regulations of the Federal Aviation Authority (FAA) such as FAA Part 77 and Advisory Circular AC-70/7460-1 and Federal Communications Commission (FCC) Part 17 and any other State or Federal agency with the authority to regulate communications antennae and support structures. Should such standards or regulations be amended, then the owner shall bring such devices and structures into compliance with the revised standards or regulations at such time as any substantive work is done.

3.Height of antennae support structures. Any antennae support structure which is proposed to be in excess of one hundred fifty (150) feet in height and located in Zoning Districts "B-3", "B-4", "B-5", "M-1", "M-2", "M-3" or "NU" and any antennae support structure which is proposed to be in excess of one hundred (100) feet and located in any residential districts, "H" Historic Districts, "A" Recreational District, "B-1" Local Shopping District or "B-2" Central Business District shall require a clear showing that such height is reasonably required to provide communications wireless services and such showing is supported by the opinion of a telecommunications consultant hired by the City at the expense of the applicant. The opinion of the consultant shall include a statement that no available alternatives exist which exceed the height limitation or the reason why such alternatives are not viable.

4. Lighting. Antennae support structures which are designed as flagpoles may be lighted, but no other antennae and antennae support structures shall be lighted unless required by the FAA or a State or Federal agency with authority to regulate, in which case a description of the required lighting scheme will be made part of the application to install, build or modify the antennae or antennae support structure. For structures that require lighting per FAA requirements, the use of white strobe lighting after twilight is prohibited. The use of red incandescent lighting at night is encouraged.

5. Advertising. Unless a disguised support structure is in the form of an otherwise lawfully placed freestanding sign, the placement of signs on structures regulated by this Section is prohibited.

6. Design.

a. Unless subject to the requirements of the FAA or any applicable State or Federal agency, towers shall maintain a galvanized steel finish or be painted a neutral color consistent with the natural or built environment of the site. If utilized as a flagpole, the tower shall be painted white.

b. Antennae equipment shelters or cabinets shall have an exterior finish compatible with the natural or built environment of the site and shall be brick or natural stone or compatible material as required by the City Council in the case of a Special Use Permit. Cabinets shall have an exterior finish compatible with the natural or built environment.

c. Antennae attached to a building or antennae support structure shall be painted a color identical to, or compatible with, the surface to which they are mounted.

d. All antennae support structures shall be surrounded by a landscape strip of not less than ten (10) feet in width, with such plantings prescribed in the Special Use Permit. Said landscape strip may also contain security lighting as may be prescribed by the Special Use Permit. It shall be exterior to any security fencing. In lieu of the required landscape strip, a minimum six (6) foot high decorative fence or wall may be approved if such fence or wall is approved as an alternative means of screening by the Special Use Permit. On guyed towers, guy anchors shall also be fenced. The tower owner shall display on the site the reference to its FCC tower site number.

e. All antennae support structures shall be set back from any dedicated public street and any adjacent residentially zoned property a distance equal to the height of the tower, unless otherwise modified by a Special Use Permit approved by the City Council. All towers adjacent to non-residential zoned property shall maintain setbacks from such non-residential zoned property as follows, unless otherwise modified by a Special Use Permit approved by the City Council: guyed towers shall be set back a distance equal to sixty percent (60%) of the tower height; support towers and monopoles shall be set back at least twenty-five (25) feet. In all cases, towers and accessory buildings shall meet the minimum setbacks of the applicable Zoning District in which they are located.

f. Ground anchors of all guyed towers shall be located on the same parcel as the tower and meet a setback of ten (10) feet from the property line to the anchor concrete.

g. Vehicle or outdoor storage at any antennae support structure site is prohibited.

h. On-site parking for periodic maintenance and service shall be provided at all antennae or antennae support structure locations. Access to and parking for antennae or antennae support structure locations shall be provided on a paved surface.

7. Shared use.

a. In order to maximize the use of an existing or proposed wireless tower, the tower owner shall, prior to the issuance of any Building Permit or Special Use Permit to alter or modify any tower existing as of July 13, 1998, provide to the City a written statement signed by a corporate officer agreeing to make said tower available for use by others subject to reasonable technical limitations and reasonable financial terms. The willful and knowing failure of a tower owner to agree to shared use or to negotiate in good faith with potential users shall be cause for the withholding of future permits to the same tower owner to install, build or modify antennae or antennae support structures within the City and possible forfeiture of continued use of the existing tower.

b. Prior to the issuance of any Permit to install, build or modify any tower, the tower owner shall furnish the Building Commissioner an inventory of all towers in or within one-half (½) mile of the City limits of Florissant and shall certify to the Building Commissioner that they have not been able to conclude a sharing agreement to use one (1) of the existing towers or that an existing tower will not meet the technical needs or coverage required by the applicant. Copies of all rejection letters and of engineering studies indicating the technical reasons that an existing structure is not acceptable shall be included with the application.

c.Any new tower at a height of eighty (80) feet above ground level or higher shall be designed and constructed to accommodate at least two (2) additional user(s) unless a larger number is indicated by the City. The willful and knowing failure of the owner of a tower built for shared use to negotiate in good faith with potential users shall be cause for the withholding of future permits to the same owner to install, build or modify antennae or antennae support structures within the City.

These general requirements shall be observed unless otherwise waived or modified by a Special Use Permit.

B.Permitted Use. Upon receipt of the appropriate Building Permit, the following are allowed:

1.The attachment of additional antennae or the replacement of antennae to any tower or the addition or replacement of antennae equipment shelters existing on July 13, 1998, or subsequently approved in accordance with these regulations, provided that additional antennae equipment shelters or cabinets are located within the existing antennae support structure site.

2.The mounting of antennae in or on any existing building or structure, except for outdoor advertising signs, not exceeding twelve (12) feet above the highest point of the structure or except that antennae mounted on a water tank up to twenty-one (21) feet in length or on utility transmission line towers not exceeding twelve (12) feet above the highest point or utility or lighting distribution poles not exceeding six (6) feet.

3.The maintenance, without alteration, of any antennae or antennae support structure existing on July 13, 1998. Modification to an existing antennae support structure, including, but not limited to, the replacement or addition of any antennae or equipment shelters, shall be subject to all the provisions of this Chapter. However, this Section shall not limit the replacement of any antennae with a like model for purposes of maintenance.

C.Administrative Approval. Prior to the issuance of a Building Permit, plans for the following administratively authorized installations shall be reviewed and approved by the Building Commissioner. In the event of disapproval of any such plans, approval may be sought by way of a Special Use Permit.

1.The enlargement of the existing antennae support structure site to support co-user location as approved by the Special Use Permit.

2.The one-time replacement of any antennae support structure existing on July 13, 1998, or subsequently approved in accordance with these regulations so long as the purpose of the replacement is to accommodate shared use of the site or to eliminate a safety hazard. The new antennae support structure shall be of the same type as the original, except that a guyed or self-supporting (lattice) tower may be replaced by a monopole or disguised support structure. The height of the new antennae support structure may exceed that of the original by not more than twenty (20) feet.

3.An antennae support structure if located on property owned by the City of Florissant and leased by the City to the applicant or used by the City following approval of the City Council.

4.The construction of a disguised support structure in the "A" Recreational District, all "H" Historic Districts and all residential Districts provided that all related equipment shall be placed underground or concealed within the structure. In addition, the construction of a disguised support structure in all commercial districts, industrial districts and the "NU" Non-Urban District provided that all related equipment shall be placed underground or concealed within the structure or placed in a cabinet if the disguised support structure is accessory to an existing commercial, industrial, institutional or other non-residential use. In the event that any support structure is of a design or type such that there is a question of whether such design or type is effective to camouflage or conceal its presence as an appropriately placed architecture or natural feature, the Building Commissioner may disapprove such support structure.

5.The installation of antennae on buildings or structures or the construction of an antennae support structure on land owned by a Federal or State agency, Federal or State board or Federal or State authority.

6.Antenna dishes in excess of twenty-four (24) inches in diameter. However, such dishes are required to obtain a Building Permit.

D.Special Use Permit Required. All proposals to install, build or modify an antennae support structure not covered under Subsections (B) or (C) above or required by the Zoning District regulations shall require the applicant to obtain a Special Use Permit. The applicant shall be required to meet the requirements of a Special Use Permit.

1.Applications for a Special Use Permit shall be filed and processed in the manner and time frame as established for all other Special Use Permits under the Zoning Code and shall include the following additional information:

a.An analysis of the area containing existing topographical contours; and

b.An inventory of all owners of antennae in or within one-half (½) mile of the City limits of Florissant. The inventory shall include the antennae reference name or number, the street location, latitude and longitude, structure type, height, type and mounting height of existing antennae and an assessment of available ground space for the placement of additional equipment shelters; and

c.Whether the proposed location for the antennae support structure is within or outside of the antennae site area as identified by the radio tower siting master plan and if the proposed location is outside of the antennae site area, then the petitioner shall submit a statement of conditions which render said locations unsuitable.

2.Findings required. In addition to any other determinations specified by the Zoning Code for the consideration of Special Use Permits, the Planning and Zoning Commission shall make findings as to the following:

a.The proposed antennae support structure is not and cannot be located within a potential antenna site area as designated by the radio tower siting master plan.

b.There are other limiting conditions that render existing towers, structures or buildings within the applicant's required geographic area unsuitable.

c.The design of the tower or structure, including the antennae, shelter and ground layout, maximally reduces visual degradation and otherwise comply with the provisions and intent of this Chapter.

d.The proposal minimizes the number and size of the towers or structures that will be required in the geographic area surrounding the proposed site.

e.The applicant attempted to take advantage of available shared use options provided by this Chapter or otherwise.

E.Cost Reimbursement. In the event the City needs to retain a consultant to analyze the technical requirements and appropriate location of a telecommunication tower, the applicant shall pay to the City of Florissant any and all reasonable costs incurred.

F.Tower Removal. Any tower or the upper portion of any tower which is occupied by inactive antennae for a period of twelve (12) months shall be considered a public nuisance and the tower and support structure including footings, where appropriate, be removed at the owner's expense. Removal of upper portions of a tower manufactured as a single object shall not be required.

G.Radio Tower Siting Master Plan. The radio tower siting master plan is made a part of this Chapter as if fully set out herein and may be revised from time to time at the discretion of the Building Commissioner. (Ord. No. 7249 §1, 2-13-06)"

The Radio Tower Master Plan is in need of revision and involves strategy issues regarding frequency of towers, staff suggests that the Commission consider the code quoted above to be out of sync with State regulations.

State regulations now considers cellular providers a public utility per House Bill 331, that due to demand, towers are to be permissible within regulations. Towers that are rejected outright will likely be pursued by other means for approval.

Suggested Motion for 62 Grandview amendment:

I move to recommend approval to amend a Special Use Permit to allow a cellular tower and outdoor equipment at 62 Grandview Plaza in an 'B-5' Zoning District with the following additional requirements to be part of the record:

1. Color of all new exposed equipment to match existing flagpole.

(end report and suggested motion)

2nd

DocuSign Envelope ID: 6D305718-CB4D-44E0-8615-4BD316E74786

Sprint

SPRINT SITE NUMBER:	ST03XC115	CROWN CASTLE BU #:	880730
SPRINT SITE NAME:	----	SITE ADDRESS:	62 GRANDVIEW PLAZA FLORISSANT, MO 63033
SITE TYPE:	MONOPOLE	COUNTY:	ST. LOUIS
TOWER HEIGHT:	99'-3"	JURISDICTION:	CITY OF FLORISSANT

SPRINT 2016/2017 LOCAL ASK INITIATIVE

SITE INFORMATION

SITE NAME:	GRANDVIEW CENTER PLAZA
SITE ADDRESS:	62 GRANDVIEW PLAZA FLORISSANT,MO 63033
COUNTY:	ST. LOUIS
MAP/PARCEL #:	09H110045
AREA OF CONSTRUCTION:	EXISTING
LATITUDE:	38° 46' 23.3"
LONGITUDE:	-90° 18' 14.1"
LAT/LONG TYPE:	NAD83
GROUND ELEVATION:	615'-0" FT.
CURRENT ZONING:	B5
JURISDICTION:	CITY OF FLORISSANT
OCCUPANCY CLASSIFICATION:	U
TYPE OF CONSTRUCTION:	VB
A.D.A. COMPLIANCE:	FACILITY IS UNMANNED AND NOT FOR HUMAN HABITATION
PROPERTY OWNER:	DARLINGTON ENTERPRISES LL BROADWAY SYCAMORE PARTNER 3415 S SEPULVEDA BLVD SUITE 400 LOS ANGELES, CA 90034
TOWER OWNER:	GLOBAL SIGNAL ACQUISITIONS II LLC 2000 CORPORATE DRIVE CANONSBURG, PA 15317
CARRIER/APPLICANT:	SPRINT 9801 WEST HIGGINS ROAD, SUITE 220 ROSEMONT, ILLINOIS 60018
CROWN CASTLE APPLICATION ID:	361238
ELECTRIC PROVIDER:	AMEREN UE (800) 552-7582
TELCO PROVIDER:	AT&T (866) 620-6900

PROJECT TEAM

CROWN CASTLE A&E FIRM:	CROWN CASTLE 2000 CORPORATE DRIVE CANONSBURG, PA 15317 CROWNAE.APPROVAL@CROWNCASTLE.COM
CROWN CASTLE CONTACTS:	1 CITY PLACE DRIVE, SUITE 490 ST. LOUIS, MO 63141 GARY SULLIVAN - PROJECT MANAGER (314) 513-0151 CASEY HEIDEL - CONSTRUCTION MANAGER (618) 960-7472 KEITH HAHN - A&E PROJECT MANAGER KEITH.HAHN@CROWNCASTLE.COM (314) 372-2836

DRAWING INDEX

SHEET #	SHEET DESCRIPTION
T-1	TITLE SHEET
T-2	GENERAL NOTES
C-1	OVERALL AND ENLARGED SITE PLAN
C-2	FINAL ELEVATION AND ANTENNA PLANS
C-3	ANTENNA AND CABLE SCHEDULE, & DETAILS
G-1	GROUNDING DETAILS
G-2	GROUNDING DETAILS

ALL DRAWINGS CONTAINED HEREIN ARE FORMATTED FOR FULL SIZE. CONTRACTOR SHALL VERIFY ALL PLANS AND EXISTING DIMENSIONS AND CONDITIONS ON THE JOB SITE AND SHALL IMMEDIATELY NOTIFY THE ENGINEER IN WRITING OF ANY DISCREPANCIES BEFORE PROCEEDING WITH THE WORK OR BE RESPONSIBLE FOR SAME.

PROJECT DESCRIPTION

THE PURPOSE OF THIS PROJECT IS TO ENHANCE BROADBAND CONNECTIVITY AND CAPACITY TO THE EXISTING ELIGIBLE WIRELESS FACILITY.

- REMOVE (1) FLAG
- INSTALL (3) ANTENNAS
- INSTALL (3) RRHs
- INSTALL (1) 1" INNERDUCT INSIDE THE TOWER
- INSTALL (1) 17/64" CABLE INSIDE THE 1" INNERDUCT
- INSTALL (1) 1/4" CABLE INSIDE THE 1" INNERDUCT
- INSTALL (1) 10'-0"x15'-0" FLAG

DESIGN PACKAGE BASED ON THE APPLICATION
ID: 361238
REVISION: 1

CROWN CASTLE APPROVED
By: Keith Hahn

THE PARTIES ABOVE HEREBY APPROVE AND ACCEPT THESE DOCUMENTS AND AUTHORIZE THE CONTRACTOR TO PROCEED WITH THE CONSTRUCTION DESCRIBED HEREIN. ALL CONSTRUCTION DOCUMENTS ARE SUBJECT TO REVIEW BY THE LOCAL BUILDING DEPARTMENT AND ANY CHANGES AND MODIFICATIONS THEY MAY IMPOSE.

LOCATION MAP

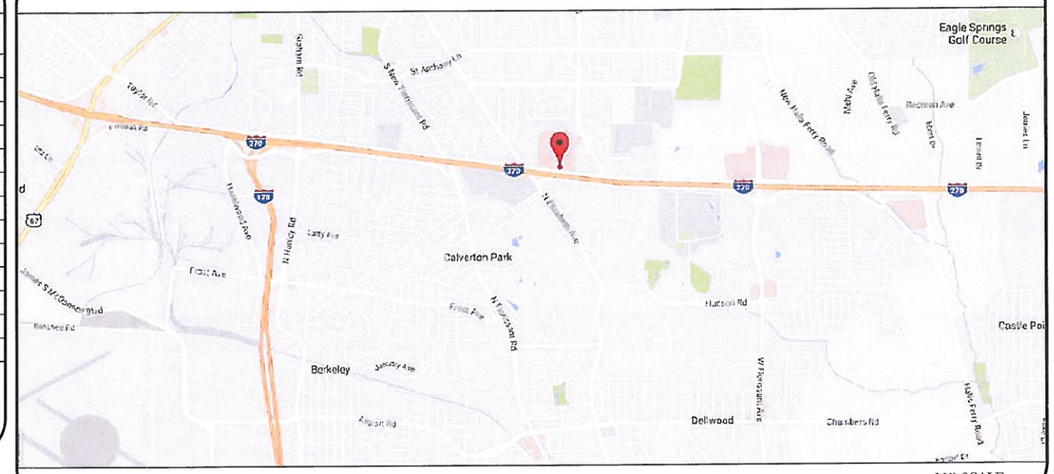

NO SCALE

APPLICABLE CODES/REFERENCE DOCUMENTS

ALL WORK SHALL BE PERFORMED AND MATERIALS INSTALLED IN ACCORDANCE WITH THE CURRENT EDITIONS OF THE FOLLOWING CODES AS ADOPTED BY THE LOCAL GOVERNING AUTHORITIES. NOTHING IN THESE PLANS IS TO BE CONSTRUED TO PERMIT WORK NOT CONFORMING TO THESE CODES:

CODE TYPE	CODE
BUILDING	IBC 2009
MECHANICAL	IMC 2009
ELECTRICAL	NEC 2008

REFERENCE DOCUMENTS:

STRUCTURAL ANALYSIS: GPD GROUP
DATED SEPTEMBER 16, 2016

MOUNT ANALYSIS: BY OTHERS

RECOMMENDED APPROVAL
PLANNING & ZONING
CHAIRMAN

SIGN: DATE: 11/2/2016

INSTALLER NOTE:

TOWER DOES NOT HAVE CLIMBING FACILITIES – MANLIFT REQUIRED FOR ELEVATED WORK.

CALL MISSOURI ONE CALL
(800) DIG-RITE
CALL 3 WORKING DAYS
BEFORE YOU DIG!

Sprint

CROWN CASTLE
1 CITY PLACE DRIVE, SUITE 490
ST. LOUIS, MO 63141

SPRINT SITE NUMBER:
ST03XC115

BU #: **880730**
GRANDVIEW CENTER PLAZA

62 GRANDVIEW PLAZA
FLORISSANT, MO 63033

EXISTING 99'-3" MONOPOLE

ISSUED FOR:

REV	DATE	DRWN	DESCRIPTION	DES./QA
A	09/29/16	AK	PRELIMINARY	LMR
0	10/05/16	AK	CONSTRUCTION	LMR

STATE OF MISSOURI
ANDREW JOSEPH FANDÓZZI III
BAD6066DD9024F4...
NUMBER
PE-2014040436
PROFESSIONAL ENGINEER

10/5/2016 | 10:10:00 AM EDT

Crown Castle USA, Inc.
Certification of Authorization #2010006796

IT IS A VIOLATION OF LAW FOR ANY PERSON, UNLESS THEY ARE ACTING UNDER THE DIRECTION OF A LICENSED PROFESSIONAL ENGINEER, TO ALTER THIS DOCUMENT.

SHEET NUMBER: T-1
REVISION: 0

DocuSign Envelope ID: 6D305718-CB4D-44E0-8615-4BD316E74786

SITE WORK GENERAL NOTES:

1. THE SUBCONTRACTOR SHALL CONTACT UTILITY LOCATING SERVICES PRIOR TO THE START OF CONSTRUCTION.
2. ALL EXISTING ACTIVE SEWER, WATER, GAS, ELECTRIC AND OTHER UTILITIES WHERE ENCOUNTERED IN THE WORK, SHALL BE PROTECTED AT ALL TIMES AND WHERE REQUIRED FOR THE PROPER EXECUTION OF THE WORK, SHALL BE RELOCATED AS DIRECTED BY CONTRACTOR. EXTREME CAUTION SHOULD BE USED BY THE SUBCONTRACTOR WHEN EXCAVATING OR DRILLING PIERS AROUND OR NEAR UTILITIES, SUBCONTRACTOR SHALL PROVIDE SAFETY TRAINING FOR THE WORKING CREW. THIS WILL INCLUDE BUT NOT BE LIMITED TO A) FALL PROTECTION B) CONFINED SPACE C) ELECTRICAL SAFETY D) TRENCHING AND EXCAVATION.
3. ALL SITE WORK TO COMPLY WITH QAS-STD-10068 "INSTALLATION STANDARDS FOR CONSTRUCTION ACTIVITIES ON CROWN CASTLE TOWER SITE" AND LATEST VERSION OF TIA 1019 "STANDARD FOR INSTALLATION, ALTERATION, AND MAINTENANCE OF ANTENNA SUPPORTING STRUCTURES AND ANTENNAS."
4. ALL SITE WORK SHALL BE AS INDICATED ON THE STAMPED CONSTRUCTION DRAWINGS AND PROJECT SPECIFICATIONS.
5. IF NECESSARY, RUBBISH, STUMPS, DEBRIS, STICKS, STONES AND OTHER REFUSE SHALL BE REMOVED FROM THE SITE AND DISPOSED OF LEGALLY.
6. ALL EXISTING INACTIVE SEWER, WATER, GAS, ELECTRIC AND OTHER UTILITIES, WHICH INTERFERE WITH THE EXECUTION OF THE WORK, SHALL BE REMOVED AND/OR CAPPED, PLUGGED OR OTHERWISE DISCONTINUED AT POINTS WHICH WILL NOT INTERFERE WITH THE EXECUTION OF THE WORK, SUBJECT TO THE APPROVAL OF CONTRACTOR, OWNER AND/OR LOCAL UTILITIES.
7. THE SUBCONTRACTOR SHALL PROVIDE SITE SIGNAGE IN ACCORDANCE WITH THE TECHNICAL SPECIFICATION FOR SITE SIGNAGE.
8. THE SITE SHALL BE GRADED TO CAUSE SURFACE WATER TO FLOW AWAY FROM THE BTS EQUIPMENT AND TOWER AREAS.
9. NO FILL OR EMBANKMENT MATERIAL SHALL BE PLACED ON FROZEN GROUND. FROZEN MATERIALS, SNOW OR ICE SHALL NOT BE PLACED IN ANY FILL OR EMBANKMENT.
10. THE SUB GRADE SHALL BE COMPACTED AND BROUGHT TO A SMOOTH UNIFORM GRADE PRIOR TO FINISHED SURFACE APPLICATION.
11. THE AREAS OF THE OWNERS PROPERTY DISTURBED BY THE WORK AND NOT COVERED BY THE TOWER, EQUIPMENT OR DRIVEWAY, SHALL BE GRADED TO A UNIFORM SLOPE, AND STABILIZED TO PREVENT EROSION AS SPECIFIED ON THE PROJECT SPECIFICATIONS.
12. SUBCONTRACTOR SHALL MINIMIZE DISTURBANCE TO EXISTING SITE DURING CONSTRUCTION. EROSION CONTROL MEASURES, IF REQUIRED DURING CONSTRUCTION, SHALL BE IN CONFORMANCE WITH THE LOCAL GUIDELINES FOR EROSION AND SEDIMENT CONTROL.
13. NOTICE TO PROCEED– NO WORK TO COMMENCE PRIOR TO COMPANY'S WRITTEN NOTICE TO PROCEED AND THE ISSUANCE OF A PURCHASE ORDER.
14. ALL CONSTRUCTION MEANS AND METHODS; INCLUDING BUT NOT LIMITED TO, ERECTION PLANS, RIGGING PLANS, CLIMBING PLANS, AND RESCUE PLANS SHALL BE THE RESPONSIBILITY OF THE GENERAL CONTRACTOR RESPONSIBLE FOR THE EXECUTION OF THE WORK CONTAINED HEREIN AND SHALL MEET ANSI/TIA 1019 (LATEST EDITION), OSHA, AND GENERAL INDUSTRY STANDARDS. ALL RIGGING PLANS SHALL ADHERE TO ANSI/TIA–1019 (LATEST EDITION) INCLUDING THE REQUIRED INVOLVEMENT OF A QUALIFIED ENGINEER FOR CLASS IV CONSTRUCTION.

STRUCTURAL STEEL NOTES:

1. ALL STEEL WORK SHALL BE PAINTED IN ACCORDANCE WITH THE PROJECT SPECIFICATIONS AND IN ACCORDANCE WITH ASTM A36 UNLESS OTHERWISE NOTED.
2. BOLTED CONNECTIONS SHALL BE ASTM A325 BEARING TYPE (3/4"ø) CONNECTIONS AND SHALL HAVE MINIMUM OF TWO BOLTS UNLESS NOTED OTHERWISE.
3. NON–STRUCTURAL CONNECTIONS FOR STEEL GRATING MAY USE 5/8"ø ASTM A307 BOLTS UNLESS NOTED OTHERWISE.
4. INSTALLATION OF CONCRETE EXPANSION/WEDGE ANCHOR, SHALL BE PER MANUFACTURER'S RECOMMENDED PROCEDURE. THE ANCHOR BOLT, DOWEL OR ROD SHALL CONFORM TO MANUFACTURER'S RECOMMENDATION FOR EMBEDMENT DEPTH OR AS SHOWN ON THE DRAWINGS. NO REBAR SHALL BE CUT WITHOUT PRIOR CONTRACTOR APPROVAL WHEN DRILLING HOLES IN CONCRETE. SPECIAL INSPECTIONS, REQUIRED BY GOVERNING CODES, SHALL BE PERFORMED IN ORDER TO MAINTAIN MANUFACTURER'S MAXIMUM ALLOWABLE LOADS.

CONCRETE AND REINFORCING STEEL NOTES:

1. ALL CONCRETE WORK SHALL BE IN ACCORDANCE WITH THE ACI 301, ACI 318, ACI 336, ASTM A184, ASTM A185 AND THE DESIGN AND CONSTRUCTION SPECIFICATION FOR CAST–IN–PLACE CONCRETE.
2. ALL CONCRETE SHALL HAVE A MINIMUM COMPRESSIVE STRENGTH OF 3000 PSI AT 28 DAYS, UNLESS NOTED OTHERWISE. SLAB FOUNDATION DESIGN ASSUMING ALLOWABLE SOIL BEARING PRESSURE OF 2000 PSF.
3. REINFORCING STEEL SHALL CONFORM TO ASTM A615, GRADE 60, DEFORMED UNLESS NOTED OTHERWISE. WELDED WIRE FABRIC SHALL CONFORM TO ASTM A185 WELDED STEEL WIRE FABRIC UNLESS NOTED OTHERWISE. SPLICES SHALL BE CLASS "B" AND ALL HOOKS SHALL BE STANDARD, UNO.
4. THE FOLLOWING MINIMUM CONCRETE COVER SHALL BE PROVIDED FOR REINFORCING STEEL UNLESS SHOWN OTHERWISE ON DRAWINGS:

   CONCRETE CAST AGAINST EARTH..................3 IN.
   CONCRETE EXPOSED TO EARTH OR WEATHER:
   #6 AND LARGER.................................2 IN.
   #5 AND SMALLER & WWF..................1 1/2 IN.
   CONCRETE NOT EXPOSED TO EARTH OR WEATHER OR NOT CAST AGAINST THE GROUND:
   SLAB AND WALLS...............................3/4 IN.
   BEAMS AND COLUMNS.......................1 1/2 IN.

5. A CHAMFER 3/4" SHALL BE PROVIDED AT ALL EXPOSED EDGES OF CONCRETE, UNLESS NOTED OTHERWISE. IN ACCORDANCE WITH ACI 301 SECTION 4.2.4.

MASONRY NOTES:

1. HOLLOW CONCRETE MASONRY UNITS SHALL MEET A.S.T.M. SPECIFICATION C90, GRADE N. TYPE 1. THE SPECIFIED DESIGN COMPRESSIVE STRENGTH OF CONCRETE MASONRY (F'm) SHALL BE 1500 PSI.
2. MORTAR SHALL MEET THE PROPERTY SPECIFICATION OF A.S.T.M. C270 TYP. "S" MORTAR AND SHALL HAVE A MINIMUM COMPRESSIVE STRENGTH OF 2000 PSI.
3. GROUT SHALL MEET A.S.T.M. SPECIFICATION C475 AND HAVE A MINIMUM 28 DAY COMPRESSIVE STRENGTH OF 2000 PSI.
4. CONCRETE MASONRY SHALL BE LAID IN RUNNING (COMMON) BOND.
5. WALL SHALL RECEIVE TEMPORARY BRACING. TEMPORARY BRACING SHALL NOT BE REMOVED UNTIL GROUT IS FULLY CURED.

GENERAL NOTES:

1. FOR THE PURPOSE OF CONSTRUCTION DRAWING, THE FOLLOWING DEFINITIONS SHALL APPLY:
   CONTRACTOR– __________
   SUBCONTRACTOR– GENERAL CONTRACTOR (CONSTRUCTION)
   CARRIER– SPRINT
   TOWER OWNER– CROWN CASTLE
   OEM– ORIGINAL EQUIPMENT MANUFACTURER
2. PRIOR TO THE SUBMISSION OF BIDS, THE BIDDING SUBCONTRACTOR SHALL VISIT THE CELL SITE TO FAMILIARIZE WITH THE EXISTING CONDITIONS AND TO CONFIRM THAT THE WORK CAN BE ACCOMPLISHED AS SHOWN ON THE CONSTRUCTION DRAWINGS. ANY DISCREPANCY FOUND SHALL BE BROUGHT TO THE ATTENTION OF CONTRACTOR AND CROWN CASTLE.
3. ALL MATERIALS FURNISHED AND INSTALLED SHALL BE IN STRICT ACCORDANCE WITH ALL APPLICABLE CODES, REGULATIONS AND ORDINANCES. SUBCONTRACTOR SHALL ISSUE ALL APPROPRIATE NOTICES AND COMPLY WITH ALL LAWS, ORDINANCES, RULES, REGULATIONS AND LAWFUL ORDERS OF ANY PUBLIC AUTHORITY REGARDING THE PERFORMANCE OF THE WORK. ALL WORK CARRIED OUT SHALL COMPLY WITH ALL APPLICABLE MUNICIPAL AND UTILITY COMPANY SPECIFICATIONS AND LOCAL JURISDICTIONAL CODES, ORDINANCES AND APPLICABLE REGULATIONS.
4. DRAWINGS PROVIDED HERE ARE NOT TO SCALE AND ARE INTENDED TO SHOW OUTLINE ONLY.
5. UNLESS NOTED OTHERWISE, THE WORK SHALL INCLUDE FURNISHING MATERIALS, EQUIPMENT, APPURTENANCES AND LABOR NECESSARY TO COMPLETE ALL INSTALLATIONS AS INDICATED ON THE DRAWINGS.
6. "KITTING LIST" SUPPLIED WITH THE BID PACKAGE IDENTIFIES ITEMS THAT WILL BE SUPPLIED BY CONTRACTOR. ITEMS NOT INCLUDED IN THE BILL OF MATERIALS AND KITTING LIST SHALL BE SUPPLIED BY THE SUBCONTRACTOR.
7. THE SUBCONTRACTOR SHALL INSTALL ALL EQUIPMENT AND MATERIALS IN ACCORDANCE WITH MANUFACTURER'S RECOMMENDATIONS UNLESS SPECIFICALLY STATED OTHERWISE.
8. IF THE SPECIFIED EQUIPMENT CAN NOT BE INSTALLED AS SHOWN ON THESE DRAWINGS, THE SUBCONTRACTOR SHALL PROPOSE AN ALTERNATIVE INSTALLATION FOR APPROVAL BY THE CONTRACTOR AND CROWN CASTLE PRIOR TO PROCEEDING WITH ANY SUCH CHANGE OF INSTALLATION.
9. SUBCONTRACTOR SHALL DETERMINE ACTUAL ROUTING OF CONDUIT, POWER AND T1 CABLES, GROUNDING CABLES AS SHOWN ON THE POWER, GROUNDING AND TELCO PLAN DRAWINGS.
10. THE SUBCONTRACTOR SHALL PROTECT EXISTING IMPROVEMENTS, PAVEMENTS, CURBS, LANDSCAPING AND STRUCTURES. ANY DAMAGED PART SHALL BE REPAIRED AT SUBCONTRACTOR'S EXPENSE TO THE SATISFACTION OF OWNER.
11. SUBCONTRACTOR SHALL LEGALLY AND PROPERLY DISPOSE OF ALL SCRAP MATERIALS SUCH AS COAXIAL CABLES AND OTHER ITEMS REMOVED FROM THE EXISTING FACILITY. ANTENNAS REMOVED SHALL BE RETURNED TO THE OWNER'S DESIGNATED LOCATION.
12. SUBCONTRACTOR SHALL LEAVE PREMISES IN CLEAN CONDITION. TRASH AND DEBRIS SHOULD BE REMOVED FROM SITE ON A DAILY BASIS.

ABBREVIATIONS AND SYMBOLS:

ABBREVIATIONS:

AGL	ABOVE GRADE LEVEL
BTS	BASE TRANSCEIVER STATION
(E)	EXISTING
MIN.	MINIMUM
REF	REFERENCE
RF	RADIO FREQUENCY
T.B.D.	TO BE DETERMINED
T.B.R.	TO BE RESOLVED
TYP	TYPICAL
REQ	REQUIRED
EGR	EQUIPMENT GROUND RING
AWG	AMERICAN WIRE GAUGE
MGB	MASTER GROUND BAR
EG	EQUIPMENT GROUND
BCW	BARE COPPER WIRE
SIAD	SMART INTEGRATED ACCESS DEVICE
GEN	GENERATOR
IGR	INTERIOR GROUND RING (HALO)
RBS	RADIO BASE STATION

SYMBOLS:

S/G	SOLID GROUND BUS BAR
S/N	SOLID NEUTRAL BUS BAR
	SUPPLEMENTAL GROUND CONDUCTOR
	2–POLE THERMAL–MAGNETIC CIRCUIT BREAKER
	SINGLE–POLE THERMAL–MAGNETIC CIRCUIT BREAKER
	CHEMICAL GROUND ROD
	TEST WELL
	DISCONNECT SWITCH
M	METER
	EXOTHERMIC WELD (CADWELD) (UNLESS OTHERWISE NOTED)
	MECHANICAL CONNECTION
	GROUNDING WIRE

ELECTRICAL INSTALLATION NOTES:

1. ALL ELECTRICAL WORK SHALL BE PERFORMED IN ACCORDANCE WITH THE PROJECT SPECIFICATIONS, NEC AND ALL APPLICABLE FEDERAL, STATE, AND LOCAL CODES/ORDINANCES.
2. CONDUIT ROUTINGS ARE SCHEMATIC. SUBCONTRACTOR SHALL INSTALL CONDUITS SO THAT ACCESS TO EQUIPMENT IS NOT BLOCKED AND TRIP HAZARDS ARE ELIMINATED.
3. WIRING, RACEWAY AND SUPPORT METHODS AND MATERIALS SHALL COMPLY WITH THE REQUIREMENTS OF THE NEC. HILTI EPOXY ANCHORS ARE REQUIRED BY CROWN CASTLE.
4. ALL CIRCUITS SHALL BE SEGREGATED AND MAINTAIN MINIMUM CABLE SEPARATION AS REQUIRED BY THE NEC.
5. CABLES SHALL NOT BE ROUTED THROUGH LADDER–STYLE CABLE TRAY RUNGS.
6. EACH END OF EVERY POWER, POWER PHASE CONDUCTOR (I.E., HOTS), GROUNDING AND T1 CONDUCTOR AND CABLE SHALL BE LABELED WITH COLOR–CODED INSULATION OR ELECTRICAL TAPE (3M BRAND, 1/2" PLASTIC ELECTRICAL TAPE WITH UV PROTECTION, OR EQUAL). THE IDENTIFICATION METHOD SHALL CONFORM WITH NEC AND OSHA.
7. ALL ELECTRICAL COMPONENTS SHALL BE CLEARLY LABELED WITH PLASTIC TAPE PER COLOR SCHEDULE. ALL EQUIPMENT SHALL BE LABELED WITH THEIR VOLTAGE RATING, PHASE CONFIGURATION, WIRE CONFIGURATION, POWER OR AMPACITY RATING AND BRANCH CIRCUIT ID NUMBERS (I.E. PANEL BOARD AND CIRCUIT ID'S).
8. PANEL BOARDS (ID NUMBERS) AND INTERNAL CIRCUIT BREAKERS (CIRCUIT ID NUMBERS) SHALL BE CLEARLY LABELED WITH PLASTIC LABELS.
9. ALL TIE WRAPS SHALL BE CUT FLUSH WITH APPROVED CUTTING TOOL TO REMOVE SHARP EDGES.
10. POWER, CONTROL AND EQUIPMENT GROUND WIRING IN TUBING OR CONDUIT SHALL BE SINGLE CONDUCTOR (#14 AWG OR LARGER), 600 V, OIL RESISTANT THHN OR THWN–2, CLASS B STRANDED COPPER CABLE RATED FOR 90° C (WET & DRY) OPERATION LISTED OR LABELED FOR THE LOCATION AND RACEWAY SYSTEM USED UNLESS OTHERWISE SPECIFIED.
11. SUPPLEMENTAL EQUIPMENT GROUND WIRING LOCATED INDOORS SHALL BE SINGLE CONDUCTOR (#6 AWG OR LARGER), 600V, OIL RESISTANT THHN OR THWN–2 GREEN INSULATION CLASS B STRANDED COPPER CABLE RATED FOR 90° C (WET AND DRY) OPERATION LISTED OR LABELED FOR THE LOCATION AND RACEWAY SYSTEM USED UNLESS OTHERWISE SPECIFIED.
12. POWER AND CONTROL WIRING, NOT IN TUBING OR CONDUIT, SHALL BE MULTI–CONDUCTOR, TYPE TC CABLE (#14 AWG OR LARGER), 600 V, OIL RESISTANT THHN OR THWN–2, CLASS B STRANDED COPPER CABLE RATED FOR 90° C (WET AND DRY) OPERATION WITH OUTER JACKET LISTED OR LABELED FOR THE LOCATION USED UNLESS OTHERWISE SPECIFIED.
13. ALL POWER AND GROUNDING CONNECTIONS SHALL BE CRIMP–STYLE, COMPRESSION WIRE LUGS AND WIRE NUTS BY THOMAS AND BETTS (OR EQUAL). LUGS AND WIRE NUTS SHALL BE RATED FOR OPERATION AT NO LESS THAN 75° C (90° C IF AVAILABLE).
14. RACEWAY AND CABLE TRAY SHALL BE LISTED OR LABELED FOR ELECTRICAL USE IN ACCORDANCE WITH NEMA, UL, ANSI/IEEE AND NEC.
15. ELECTRICAL METALLIC TUBING (EMT) OR RIGID NONMETALLIC CONDUIT (I.E. RIGID PVC SCHEDULE 40 OR RIGID PVC SCHEDULE 80 FOR LOCATIONS SUBJECT TO PHYSICAL DAMAGE) SHALL BE USED FOR EXPOSED INDOOR LOCATIONS.
16. ELECTRICAL METALLIC TUBING (EMT), ELECTRICAL NONMETALLIC TUBING (ENT) OR RIGID NONMETALLIC CONDUIT (RIGID PVC, SCHEDULE 40) SHALL BE USED FOR CONCEALED INDOOR LOCATIONS.
17. SCHEDULE 40 PVC UNDERGROUND ON STRAIGHTS AND SCHEDULE 80 PVC FOR ALL ELBOWS/90s AND ALL APPROVED ABOVE GRADE PVC CONDUIT.
18. LIQUID–TIGHT FLEXIBLE METALLIC CONDUIT (LIQUID–TITE FLEX) SHALL BE USED INDOORS AND OUTDOORS, WHERE VIBRATION OCCURS OR FLEXIBILITY IS NEEDED.
19. CONDUIT AND TUBING FITTINGS SHALL BE THREADED OR COMPRESSION–TYPE AND APPROVED FOR THE LOCATION USED. SET SCREW FITTINGS ARE NOT ACCEPTABLE.
20. CABINETS, BOXES AND WIRE WAYS SHALL BE LABELED FOR ELECTRICAL USE IN ACCORDANCE WITH NEMA, UL, ANSI/IEEE AND NEC.
21. WIREWAYS SHALL BE EPOXY–COATED (GRAY) AND INCLUDE A HINGED COVER, DESIGNED TO SWING OPEN DOWNWARDS; SHALL BE PANDUIT TYPE E (OR EQUAL); AND RATED NEMA 1 (OR BETTER).
22. CONDUITS SHALL BE FASTENED SECURELY IN PLACE WITH APPROVED NON–PERFORATED STRAPS AND HANGERS. EXPLOSIVE DEVICES FOR ATTACHING HANGERS TO STRUCTURE WILL NOT BE PERMITTED. CLOSELY FOLLOW THE LINES OF THE STRUCTURE, MAINTAIN CLOSE PROXIMITY TO THE STRUCTURE AND KEEP CONDUITS IN TIGHT ENVELOPES. CHANGES IN DIRECTION TO ROUTE AROUND OBSTACLES SHALL BE MADE WITH CONDUIT OUTLET BODIES. CONDUIT SHALL BE INSTALLED IN A NEAT AND WORKMANLIKE MANNER. PARALLEL AND PERPENDICULAR TO STRUCTURE WALL AND CEILING LINES. ALL CONDUIT SHALL BE FISHED TO CLEAR OBSTRUCTIONS. ENDS OF CONDUITS SHALL BE TEMPORARILY CAPPED FLUSH TO FINISH GRADE TO PREVENT CONCRETE, PLASTER OR DIRT FROM ENTERING. CONDUITS SHALL BE RIGIDLY CLAMPED TO BOXES BY GALVANIZED MALLEABLE IRON BUSHIN ON INSIDE AND GALVANIZED MALLEABLE IRON LOCKNUT ON OUTSIDE AND INSIDE.
23. EQUIPMENT CABINETS, TERMINAL BOXES, JUNCTION BOXES AND PULL BOXES SHALL BE GALVANIZED OR EPOXY–COATED SHEET STEEL; SHALL MEET OR EXCEED UL 50 AND RATED NEMA 1 (OR BETTER) INDOORS OR NEMA 3R (OR BETTER) OUTDOORS.
24. METAL RECEPTACLE, SWITCH AND DEVICE BOXES SHALL BE GALVANIZED, EPOXY–COATED OR NON–CORRODING; SHALL MEET OR EXCEED UL 514A AND NEMA OS 1; AND RATED NEMA 1 (OR BETTER) INDOORS OR WEATHER PROTECTED (WP OR BETTER) OUTDOORS.
25. NONMETALLIC RECEPTACLE, SWITCH AND DEVICE BOXES SHALL MEET OR EXCEED NEMA OS 2; AND RATED NEMA 1 (OR BETTER) INDOORS OR WEATHER PROTECTED (WP OR BETTER) OUTDOORS.
26. THE SUBCONTRACTOR SHALL NOTIFY AND OBTAIN NECESSARY AUTHORIZATION FROM THE CONTRACTOR BEFORE COMMENCING WORK ON THE AC POWER DISTRIBUTION PANELS.
27. THE SUBCONTRACTOR SHALL PROVIDE NECESSARY TAGGING ON THE BREAKERS, CABLES AND DISTRIBUTION PANELS IN ACCORDANCE WITH THE APPLICABLE CODES AND STANDARDS TO SAFEGUARD LIFE AND PROPERTY.
28. INSTALL PLASTIC LABEL ON THE METER CENTER TO SHOW "SPRINT".
29. ALL CONDUITS THAT ARE INSTALLED ARE TO HAVE A METERED MULE TAPE PULL CORD INSTALLED.

GREENFIELD GROUNDING NOTES:

1. ALL GROUND ELECTRODE SYSTEMS (INCLUDING TELECOMMUNICATION, RADIO, LIGHTNING PROTECTION AND AC POWER GES'S) SHALL BE BONDED TOGETHER AT OR BELOW GRADE, BY TWO OR MORE COPPER BONDING CONDUCTORS IN ACCORDANCE WITH THE NEC.
2. THE SUBCONTRACTOR SHALL PERFORM IEEE FALL–OF–POTENTAL RESISTANCE TO EARTH TESTING (PER IEEE 1100 AND 81) FOR GROUND ELECTRODE SYSTEMS, THE SUBCONTRACTOR SHALL FURNISH AND INSTALL SUPPLEMENTAL GROUND ELECTRODES AS NEEDED TO ACHIEVE A TEST RESULT OF 5 OHMS OR LESS.
3. THE SUBCONTRACTOR IS RESPONSIBLE FOR PROPERLY SEQUENCING GROUNDING AND UNDERGROUND CONDUIT INSTALLATION AS TO PREVENT ANY LOSS OF CONTINUITY IN THE GROUNDING SYSTEM OR DAMAGE TO THE CONDUIT AND PROVIDE TESTING RESULTS.
4. METAL CONDUIT AND TRAY SHALL BE GROUNDED AND MADE ELECTRICALLY CONTINUOUS WITH LISTED BONDING FITTINGS OR BY BONDING ACROSS THE DISCONTINUITY WITH #6 AWG COPPER WIRE UL APPROVED GROUNDING TYPE CONDUIT CLAMPS.
5. METAL RACEWAY SHALL NOT BE USED AS THE NEC REQUIRED EQUIPMENT GROUND CONDUCTOR. STRANDED COPPER CONDUCTORS WITH GREEN INSULATION, SIZED IN ACCORDANCE WITH THE NEC, SHALL BE FURNISHED AND INSTALLED WITH THE POWER CIRCUITS TO BTS EQUIPMENT.
6. EACH CABINET FRAME SHALL BE DIRECTLY CONNECTED TO THE MASTER GROUND BAR WITH GREEN INSULATED SUPPLEMENTAL EQUIPMENT GROUND WIRES, 6 AWG STRANDED COPPER OR LARGER FOR INDOOR BTS; #2 AWG SOLID TINNED COPPER FOR OUTDOOR BTS.
7. CONNECTIONS TO THE GROUND BUS SHALL NOT BE DOUBLED UP OR STACKED BACK TO BACK CONNECTIONS ON OPPOSITE SIDE OF THE GROUND BUS ARE PERMITTED.
8. ALL EXTERIOR GROUND CONDUCTORS BETWEEN EQUIPMENT/GROUND BARS AND THE GROUND RING SHALL BE #2 AWG SOLID TINNED COPPER UNLESS OTHERWISE INDICATED.
9. ALUMINUM CONDUCTOR OR COPPER CLAD STEEL CONDUCTOR SHALL NOT BE USED FOR GROUNDING CONNECTIONS.
10. USE OF 90° BENDS IN THE PROTECTION GROUNDING CONDUCTORS SHALL BE AVOIDED WHEN 45° BENDS CAN BE ADEQUATELY SUPPORTED.
11. EXOTHERMIC WELDS SHALL BE USED FOR ALL GROUNDING CONNECTIONS BELOW GRADE.
12. ALL GROUND CONNECTIONS ABOVE GRADE (INTERIOR AND EXTERIOR) SHALL BE FORMED USING HIGH PRESS CRIMPS.
13. COMPRESSION GROUND CONNECTIONS MAY BE REPLACED BY EXOTHERMIC WELD CONNECTIONS.
14. ICE BRIDGE BONDING CONDUCTORS SHALL BE EXOTHERMICALLY BONDED OR BOLTED TO THE BRIDGE AND THE TOWER GROUND BAR.
15. APPROVED ANTIOXIDANT COATINGS (I.E. CONDUCTIVE GEL OR PASTE) SHALL BE USED ON ALL COMPRESSION AND BOLTED GROUND CONNECTIONS.
16. ALL EXTERIOR GROUND CONNECTIONS SHALL BE COATED WITH A CORROSION RESISTANT MATERIAL.
17. MISCELLANEOUS ELECTRICAL AND NON–ELECTRICAL METAL BOXES, FRAMES AND SUPPORTS SHALL BE BONDED TO THE GROUND RING, IN ACCORDANCE WITH THE NEC.
18. BOND ALL METALLIC OBJECTS WITHIN 6 FT. OF MAIN GROUND WIRES WITH 1–#2 AWG TIN–PLATED COPPER GROUND CONDUCTOR.
19. GROUND CONDUCTORS USED IN THE FACILITY GROUND AND LIGHTNING PROTECTION SYSTEMS SHALL NOT BE ROUTED THROUGH METALLIC OBJECTS THAT FORM A RING AROUND THE CONDUCTOR, SUCH AS METALLIC CONDUITS, METAL SUPPORT CLIPS OR SLEEVES THROUGH WALLS OR FLOORS. WHEN IT IS REQUIRED TO BE HOUSED IN CONDUIT TO MEET CODE REQUIREMENTS OR LOCAL CONDITIONS, NON–METALLIC MATERIAL SUCH AS PVC PLASTIC CONDUIT SHALL BE USED. WHERE USE OF METAL CONDUIT IS UNAVOIDABLE (E.G., NONMETALLIC CONDUIT PROHIBITED BY LOCAL CODE) THE GROUND CONDUCTOR SHALL BE BONDED TO EACH END OF THE METAL CONDUIT.
20. ALL GROUNDS THAT TRANSITION FROM BELOW GRADE TO ABOVE GRADE MUST BE #2 TINNED SOLID IN 3/4" LIQUID TIGHT CONDUIT FROM 24" BELOW GRADE TO WITHIN 3" TO 6" OF CAD–WELD TERMINATION POINT. THE EXPOSED END OF THE LIQUID TIGHT CONDUIT MUST BE SEALED WITH SILICONE CAULK. (ADD TRANSITIONING GROUND STANDARD DETAIL AS WELL).

NEC INSULATOR COLOR CODE

DESCRIPTION	PHASE/CODE LETTER	WIRE COLOR
240/120 1Ø	LEG 1	BLACK
	LEG 2	RED
AC NEUTRAL	N	WHITE
GROUND (EGC)	G	GREEN
VDC POS	+	*RED–POLARITY MARK AT TERMINATION
VDC NEG	–	*BLACK–POLARITY MARK AT TERMINATION
240V OR 208V, 3Ø	PHASE A	BLACK
	PHASE B	RED(ORG. IF HI LEG)
	PHASE C	BLUE
480V, 3Ø	PHASE A	BROWN
	PHASE B	ORANGE
	PHASE C	YELLOW

* SEE NEC 210.5(C)(1) AND (2)

Sprint

CROWN CASTLE
1 CITY PLACE DRIVE, SUITE 490
ST. LOUIS, MO 63141

SPRINT SITE NUMBER:
ST03XC115

BU #: **880730**
GRANDVIEW CENTER PLAZA

62 GRANDVIEW PLAZA
FLORISSANT, MO 63033

EXISTING 99'-3" MONOPOLE

ISSUED FOR:

REV	DATE	DRWN	DESCRIPTION	DES./QA
A	09/29/16	AK	PRELIMINARY	LMR
0	10/05/16	AK	CONSTRUCTION	LMR

STATE OF MISSOURI
ANDREW JOSEPH FANDOZZI III
NUMBER
PE-2014040436
PROFESSIONAL ENGINEER

DocuSigned by:
BAB6069DD9024F4...

10/5/2016 | 10:10:00 AM EDT

Crown Castle USA, Inc.
Certification of Authorization #2010006796

IT IS A VIOLATION OF LAW FOR ANY PERSON, UNLESS THEY ARE ACTING UNDER THE DIRECTION OF A LICENSED PROFESSIONAL ENGINEER, TO ALTER THIS DOCUMENT.

SHEET NUMBER: T-2
REVISION: 0

DocuSign Envelope ID: 6D305718-CB4D-44E0-8615-4BD316E74786

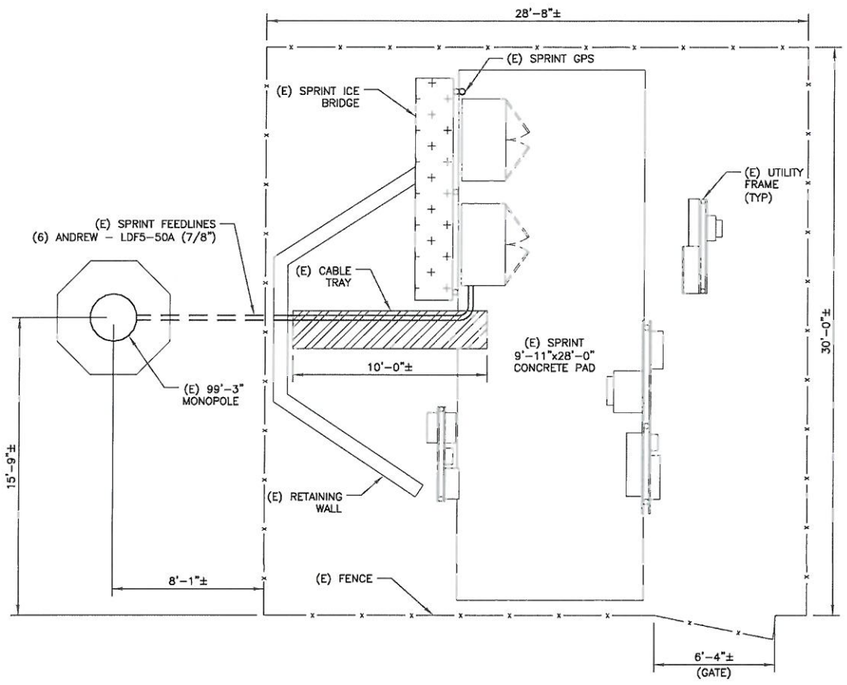

1 OVERALL SITE PLAN
SCALE: 4' 3' 2' 1' 0 4' 1/4"=1'-0" (FULL SIZE) 1/8"=1'-0" (11x17)

N

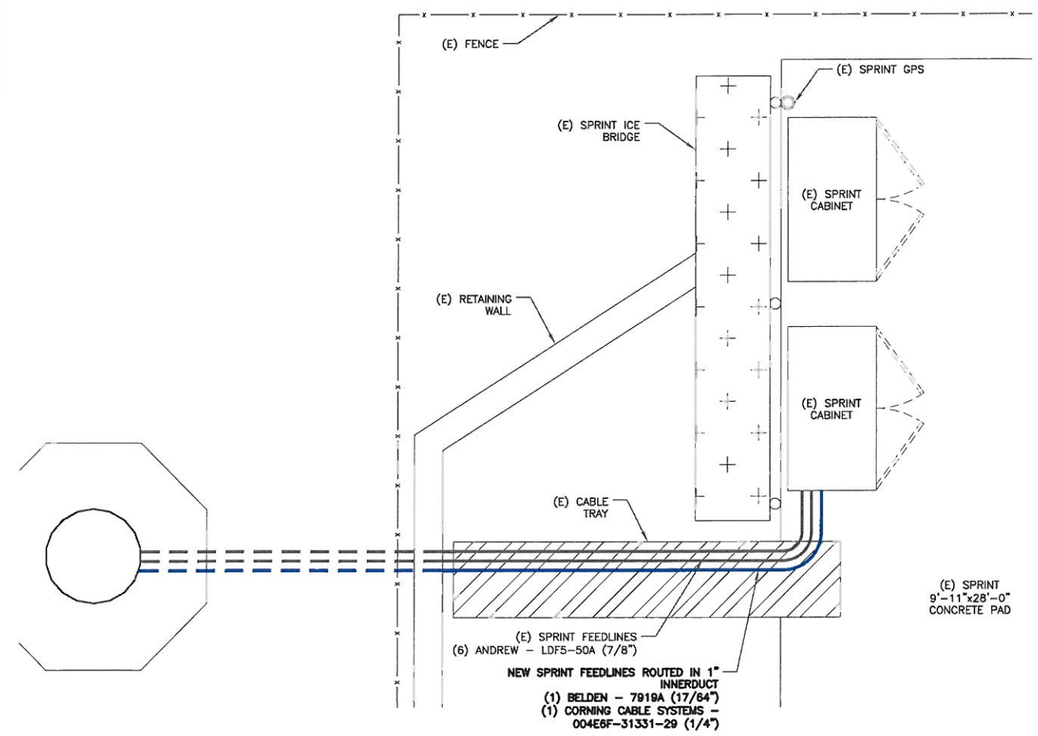

2 ENLARGED SITE PLAN
SCALE: 2' 1' 0 2' 1/2"=1'-0" (FULL SIZE) 1/4"=1'-0" (11x17)

N

Sprint

CROWN CASTLE
1 CITY PLACE DRIVE, SUITE 490
ST. LOUIS, MO 63141

SPRINT SITE NUMBER:
ST03XC115

BU #: **880730**
GRANDVIEW CENTER PLAZA

62 GRANDVIEW PLAZA
FLORISSANT, MO 63033

EXISTING 99'-3" MONOPOLE

ISSUED FOR:

REV	DATE	DRWN	DESCRIPTION	DES./QA
A	09/29/16	AK	PRELIMINARY	LMR
0	10/05/16	AK	CONSTRUCTION	LMR

STATE OF MISSOURI
ANDREW JOSEPH FANDUZZI III
NUMBER
PE-2014040436
PROFESSIONAL ENGINEER

DocuSigned by:
1FBAB0B9D9024F4...

10/5/2016 | 10:10:00 AM EDT

Crown Castle USA, Inc.
Certification of Authorization #2010006796

IT IS A VIOLATION OF LAW FOR ANY PERSON, UNLESS THEY ARE ACTING UNDER THE DIRECTION OF A LICENSED PROFESSIONAL ENGINEER, TO ALTER THIS DOCUMENT.

SHEET NUMBER: C-1
REVISION: 0

DocuSign Envelope ID: 6D305718-CB4D-44E0-8615-4BD316E74786

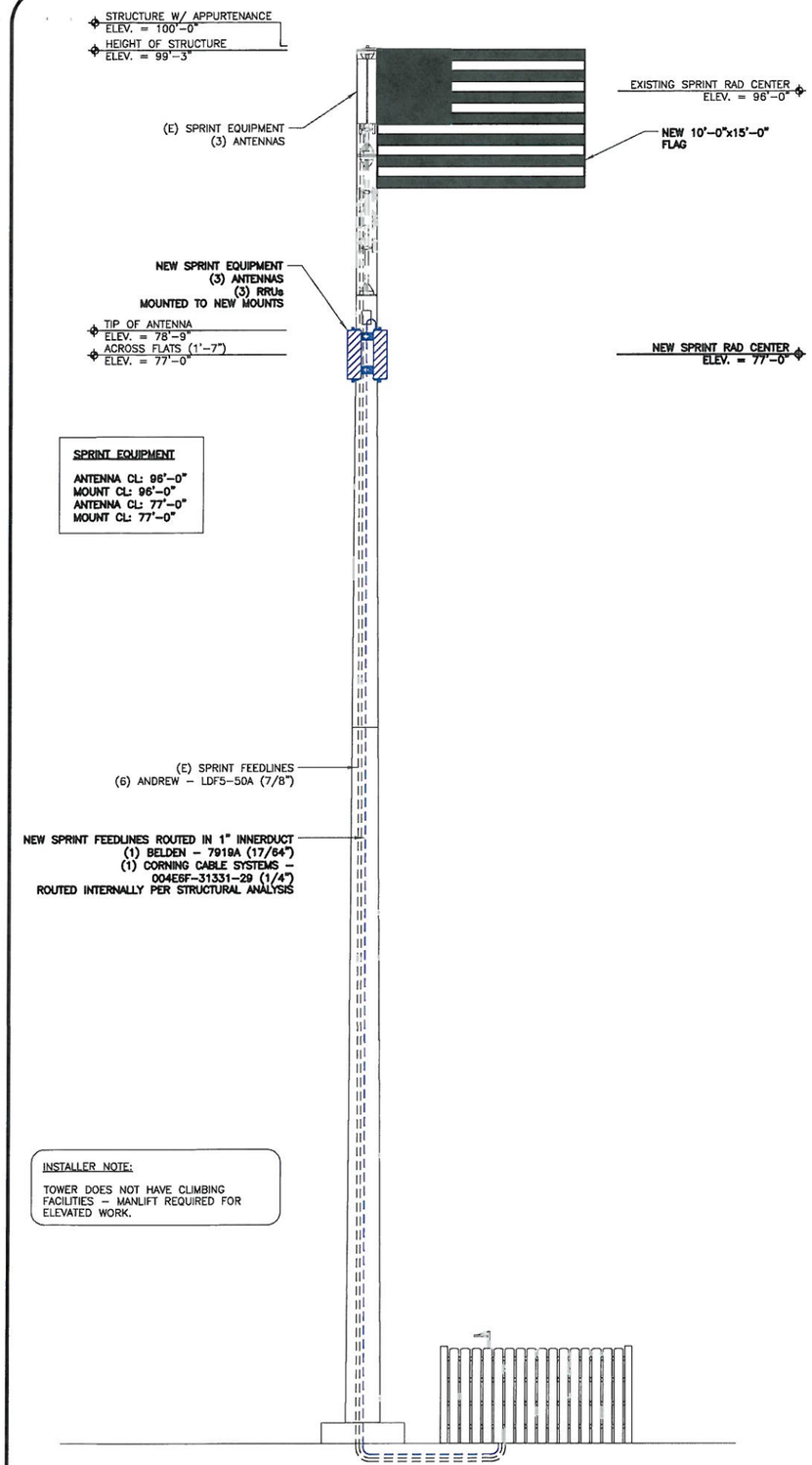

1 FINAL ELEVATION
SCALE: NOT TO SCALE

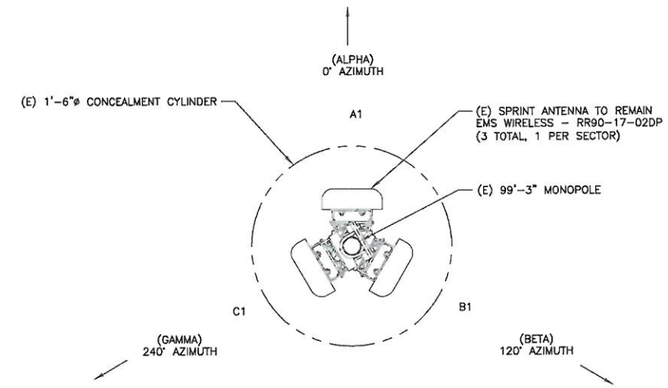

2 EXISTING ANTENNA LAYOUT (@ 96'-0")
SCALE: NOT TO SCALE

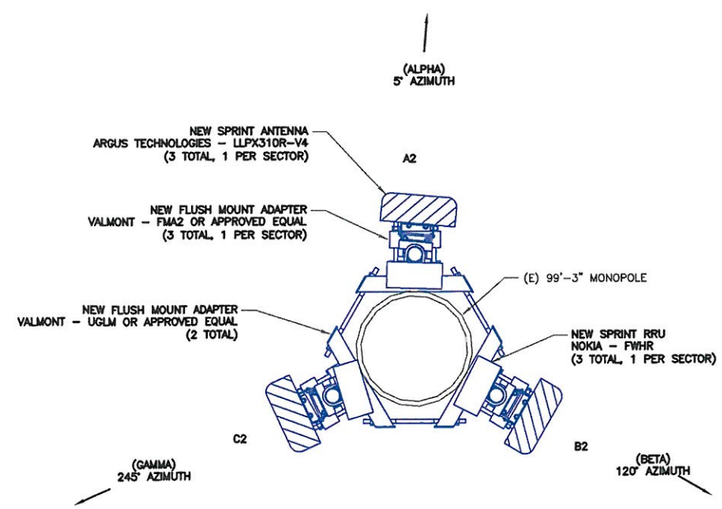

3 FINAL ANTENNA LAYOUT (@ 77'-0")
SCALE: NOT TO SCALE

Sprint

CROWN CASTLE
1 CITY PLACE DRIVE, SUITE 490
ST. LOUIS, MO 63141

SPRINT SITE NUMBER:
ST03XC115

BU #: **880730**
GRANDVIEW CENTER PLAZA

62 GRANDVIEW PLAZA
FLORISSANT, MO 63033

EXISTING 99'-3" MONOPOLE

ISSUED FOR:

REV	DATE	DRWN	DESCRIPTION	DES./QA
A	09/29/16	AK	PRELIMINARY	LMR
0	10/05/16	AK	CONSTRUCTION	LMR

STATE OF MISSOURI
ANDREW JOSEPH FANDOZZI III
NUMBER
PE-2014040436
PROFESSIONAL ENGINEER

DocuSigned by:
Andrew Fandozzi III
1FBAB0030D9024F6...

10/5/2016 | 10:10:00 AM EDT

Crown Castle USA, Inc.
Certification of Authorization #2010006796

IT IS A VIOLATION OF LAW FOR ANY PERSON, UNLESS THEY ARE ACTING UNDER THE DIRECTION OF A LICENSED PROFESSIONAL ENGINEER, TO ALTER THIS DOCUMENT.

SHEET NUMBER: C-2
REVISION: 0

DocuSign Envelope ID: 6D305718-CB4D-44E0-8615-4BD316E74786

ANTENNA SCHEDULE

SECTOR	POS.	TECHNOLOGY	RAD CENTER	AZIMUTH	ANTENNA MANUFACTURER	ANTENNA MODEL	MECH. TILT	ELECT. TILT	TOWER MOUNTED EQUIPMENT	FEEDLINE TYPE
ALPHA	A1	2500MHz	96'-0"	0°	EMS WIRELESS	RR90-17-02DP			–	(2) COAX
ALPHA	**A2**	**2500MHz**	**77'-0"**	**5°**	**ARGUS TECHNOLOGIES**	**LLPX310R-V4**			**(1) NOKIA – FWHR**	**(1) FIBER**
BETA	B1	2500MHz	96'-0"	120°	EMS WIRELESS	RR90-17-02DP			–	(2) COAX
BETA	**B2**	**2500MHz**	**77'-0"**	**120°**	**ARGUS TECHNOLOGIES**	**LLPX310R-V4**			**(1) NOKIA – FWHR**	**(1) FIBER**
GAMMA	C1	2500MHz	96'-0"	240°	EMS WIRELESS	RR90-17-02DP			–	(2) COAX
GAMMA	**C2**	**2500MHz**	**77'-0"**	**245°**	**ARGUS TECHNOLOGIES**	**LLPX310R-V4**			**(1) NOKIA – FWHR**	**–**

CABLE SCHEDULE

STATUS	CABLE TYPE	SIZE	QUANTITY
EXISTING	COAX	7/8"	6
NEW	**FIBER**	**17/64"**	**1**
NEW	**FIBER**	**1/4"**	**1**
FINAL CABLE QUANTITY			**8**

1 ANTENNA AND CABLE SCHEDULE
SCALE: NOT TO SCALE

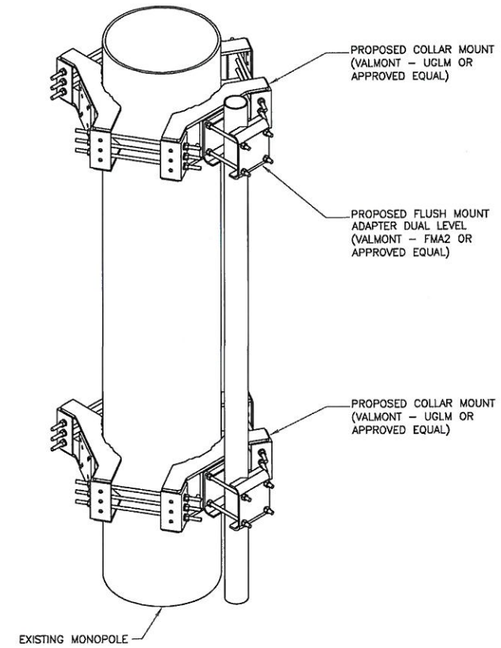

2 MOUNT DETAIL
SCALE: NOT TO SCALE

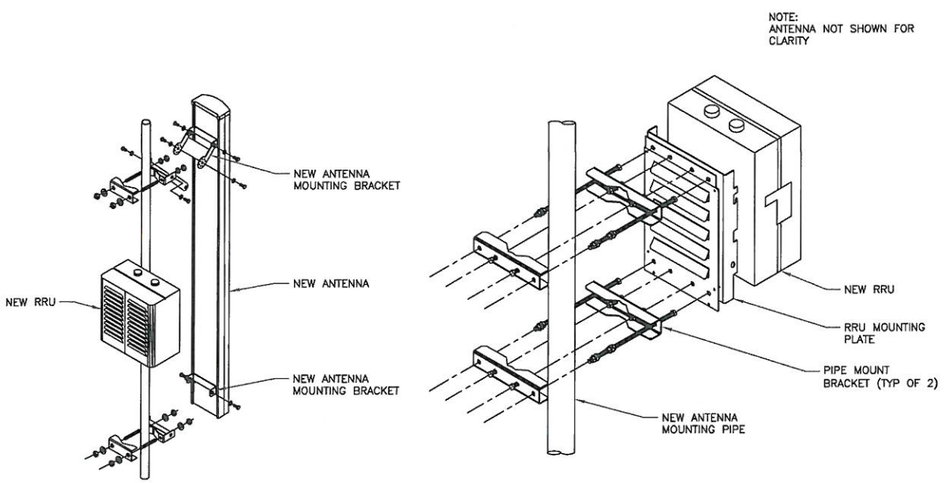

NOTE:
ALL PIPES BRACKETS AND MISCELLANEOUS HARDWARE TO BE GALVANIZED UNLESS NOTED OTHERWISE

3 ANTENNA & RRU MOUNTING DETAIL
SCALE: NOT TO SCALE

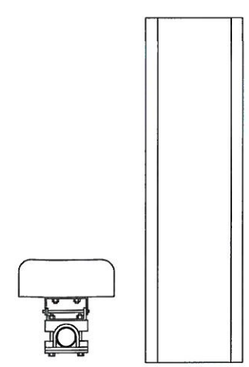

ARGUS TECHNOLOGIES – LLPX310R-V4
WEIGHT (WITHOUT MOUNTING HARDWARE): 28.66 LBS
SIZE (HxWxD): 42.13x11.81x4.53 IN.
MOUNTING HARDWARE P/N: F-042-GL-E OR T-045-GL-E
RATED WIND VELOCITY: 124.27 MPH

4 ARGUS TECHNOLOGIES – LLPX310R-V4
SCALE: NOT TO SCALE

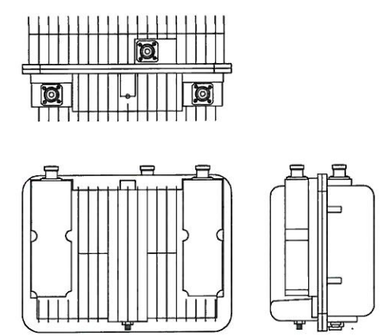

NOKIA – FWHR
WEIGHT: 24.7 LBS
SIZE (HxWxD): 9.7x12.9x6.3 IN.

5 NOKIA – FWHR
SCALE: NOT TO SCALE

Sprint

CROWN CASTLE
1 CITY PLACE DRIVE, SUITE 490
ST. LOUIS, MO 63141

SPRINT SITE NUMBER:
ST03XC115

BU #: **880730**
GRANDVIEW CENTER PLAZA

62 GRANDVIEW PLAZA
FLORISSANT, MO 63033

EXISTING 99'-3" MONOPOLE

ISSUED FOR:

REV	DATE	DRWN	DESCRIPTION	DES./QA
A	09/29/16	AK	PRELIMINARY	LMR
0	10/05/16	AK	CONSTRUCTION	LMR

STATE OF MISSOURI
ANDREW JOSEPH FANDOZZI III
PE-2014040436
PROFESSIONAL ENGINEER

DocuSigned by:
NUMBER
1B8B0E8DD9024F6...

10/5/2016 | 10:10:00 AM EDT

Crown Castle USA, Inc.
Certification of Authorization #2010006796

IT IS A VIOLATION OF LAW FOR ANY PERSON, UNLESS THEY ARE ACTING UNDER THE DIRECTION OF A LICENSED PROFESSIONAL ENGINEER, TO ALTER THIS DOCUMENT.

SHEET NUMBER: C-3
REVISION: 0

DocuSign Envelope ID: 6D305718-CB4D-44E0-8615-4BD316E74786

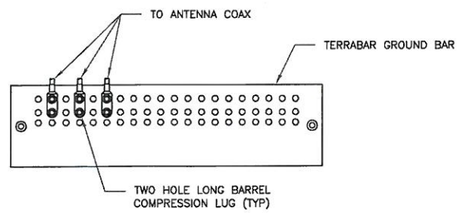

NOTES:

1. DOUBLING UP "OR STACKING" OF CONNECTIONS IS NOT PERMITTED.
2. EXTERIOR ANTIOXIDANT JOINT COMPOUND TO BE USED ON ALL EXTERIOR CONNECTIONS.
3. GROUND BAR SHALL NOT BE ISOLATED FROM TOWER. MOUNT DIRECTLY TO TOWER STEEL.

1 ANTENNA GROUND BAR DETAIL
SCALE: NOT TO SCALE

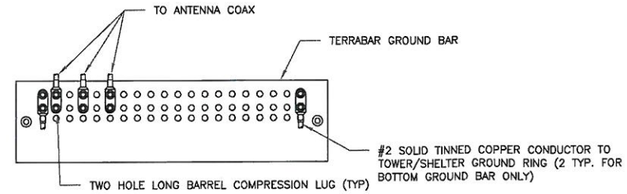

NOTES:

1. EXTERIOR ANTIOXIDANT JOINT COMPOUND TO BE USED ON ALL EXTERIOR CONNECTIONS.
2. GROUND BAR SHALL NOT BE ISOLATED FROM TOWER. MOUNT DIRECTLY TO TOWER STEEL (TOWER ONLY).
3. INSTALL GROUND BARS AT 75 FT. INTERVAL MAXIMUM.
4. GROUND BAR SHALL BE ISOLATED FROM BUILDING OR SHELTER.

2 TOWER/SHELTER GROUND BAR DETAIL
SCALE: NOT TO SCALE

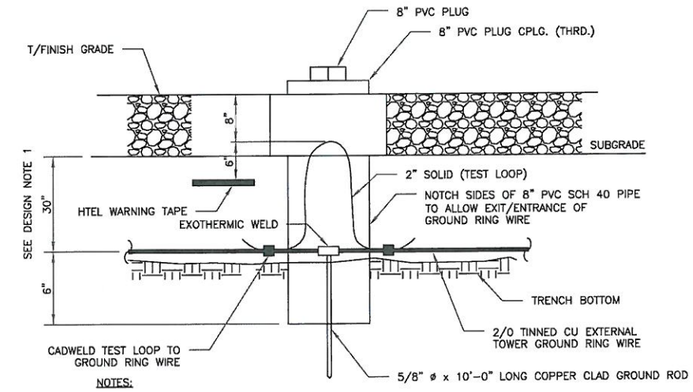

NOTES:

1. GROUND ROD SHALL BE DRIVEN VERTICALLY, NOT TO EXCEED 45 DEGREES FROM THE VERTICAL
2. GROUND WIRE SHALL BE MIN. 30" BELOW GRADE OR 6" BELOW FROST LINE. (WHICH EVER IS GREATER) AS PER N.E.C. ARTICLE 250-50(D)

3 INSPECTION PORT DETAIL
SCALE: NOT TO SCALE

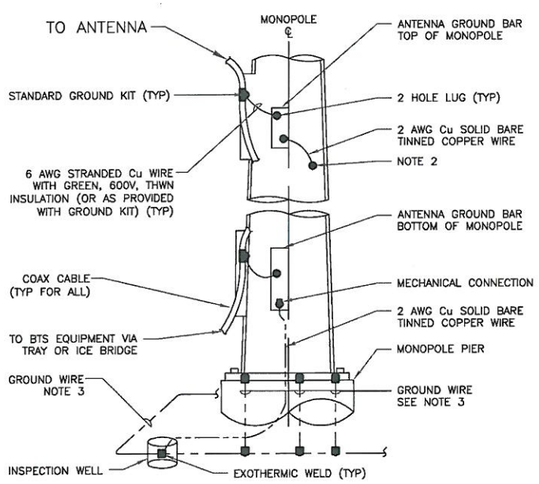

NOTES:

1. NUMBER OF GROUND BARS MAY VARY DEPENDING ON THE TYPE OF MONOPOLE, ANTENNA LOCATION AND CONNECTION ORIENTATION. COAXIAL CABLES EXCEEDING 200 FEET IN/ON THE POLE SHALL HAVE GROUND KITS AT THE MIDPOINT. PROVIDE AS REQUIRED.
2. ONLY MECHANICAL CONNECTIONS ARE ALLOWED TO BE MADE TO CROWN CASTLE TOWERS. ALL MECHANICAL CONNECTIONS SHALL BE TREATED WITH AN ANTI-OXIDANT COATING.
3. ALL TOWER GROUNDING SYSTEMS SHALL COMPLY WITH THE REQUIREMENTS OF ANSI/TIA 222. FOR TOWERS BEING BUILT TO REV G OF THE STANDARD, THE WIRE SIZE OF THE BURIED GROUND RING AND CONNECTIONS BETWEEN THE TOWER AND THE BURIED GROUND RING SHALL BE 2/0 AWG. STRANDED IN ADDITION, THE MINIMUM LENGTH OF THE GROUND RODS SHALL BE INCREASED FROM 8 FEET TO 10 FEET.

4 TYPICAL ANTENNA CABLE GROUNDING
SCALE: NOT TO SCALE

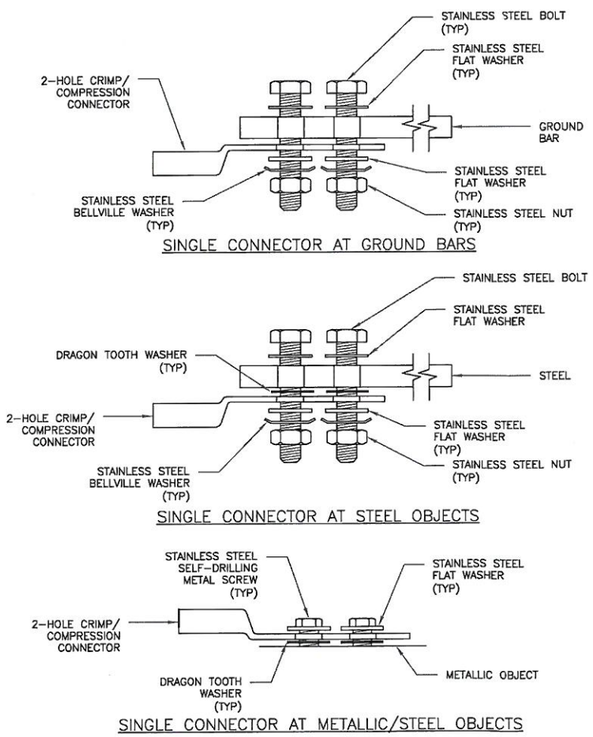

5 HARDWARE DETAIL FOR EXTERIOR CONNECTIONS
SCALE: NOT TO SCALE

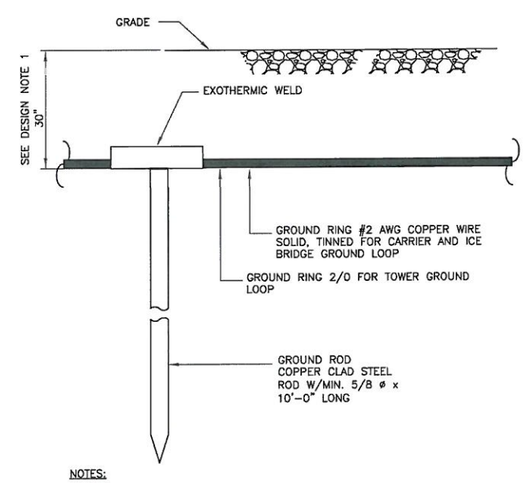

NOTES:

1. GROUND ROD SHALL BE DRIVEN VERTICALLY, NOT TO EXCEED 45 DEGREES FROM THE VERTICAL
2. GROUND WIRE SHALL BE MIN. 30" BELOW GRADE OR 6" BELOW FROST LINE. (WHICH EVER IS GREATER) AS PER N.E.C. ARTICLE 250-50(D)

6 GROUND ROD DETAIL
SCALE: NOT TO SCALE

Sprint

CROWN CASTLE
1 CITY PLACE DRIVE, SUITE 490
ST. LOUIS, MO 63141

SPRINT SITE NUMBER:
ST03XC115

BU #: **880730**
GRANDVIEW CENTER PLAZA

62 GRANDVIEW PLAZA
FLORISSANT, MO 63033

EXISTING 99'-3" MONOPOLE

ISSUED FOR:

REV	DATE	DRWN	DESCRIPTION	DES./QA
A	09/29/16	AK	PRELIMINARY	LMR
0	10/05/16	AK	CONSTRUCTION	LMR

STATE OF MISSOURI
ANDREW JOSEPH FANDUZZI III
NUMBER PE-2014040436
PROFESSIONAL ENGINEER

DocuSigned by:
A Fanduzzi
1BAB6038D9024F4...

10/5/2016 | 10:10:00 AM EDT

Crown Castle USA, Inc.
Certification of Authorization #2010006796

IT IS A VIOLATION OF LAW FOR ANY PERSON, UNLESS THEY ARE ACTING UNDER THE DIRECTION OF A LICENSED PROFESSIONAL ENGINEER, TO ALTER THIS DOCUMENT.

SHEET NUMBER: G-1
REVISION: 0

DocuSign Envelope ID: 6D305718-CB4D-44E0-8615-4BD316E74786

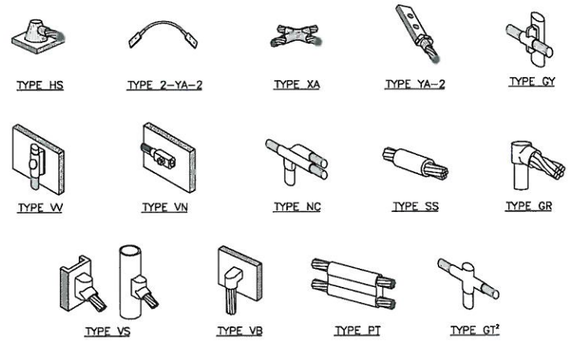

NOTE:

1. ERICO EXOTHERMIC "MOLD TYPES" SHOWN HERE ARE EXAMPLES. CONSULT WITH CONSTRUCTION MANAGER FOR SPECIFIC MOLDS TO BE USED FOR THIS PROJECT.
2. MOLD TYPE ONLY TO BE USED BELOW GRADE WHEN CONNECTING GROUND RING TO GROUND ROD.

1 CADWELD GROUNDING CONNECTIONS
SCALE: NOT TO SCALE

WIRE SIZE	BURNDY LUG	BOLT SIZE
#6 AWG GREEN INSULATED	YA6C-2TC38	3/8" - 16 NC S 2 BOLT
#2 AWG SOLID TINNED	YA3C-2TC38	3/8" - 16 NC S 2 BOLT
#2 AWG STRANDED	YA2C-2TC38	3/8" - 16 NC S 2 BOLT
#2/0 AWG STRANDED	YA26-2TC38	3/8" - 16 NC S 2 BOLT
#4/0 AWG STRANDED	YA28-2N	1/2" - 16 NC S 2 BOLT

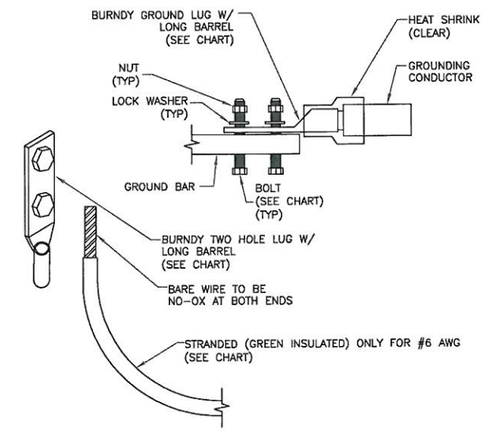

NOTES:

1. ALL GROUNDING LUGS ARE TO BE INSTALLED PER MANUFACTURER'S SPECIFICATIONS. ALL HARDWARE BOLTS, NUTS, LOCK WASHERS SHALL BE STAINLESS STEEL. ALL HARDWARE ARE TO BE AS FOLLOWS: BOLT, FLAT WASHER,GROUND BAR, GROUND LUG, FLAT WASHER AND NUT.

2 MECHANICAL LUG CONNECTION
SCALE: NOT TO SCALE

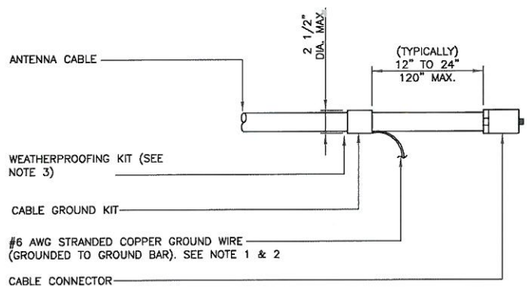

NOTES:

1. DO NOT INSTALL CABLE GROUND KIT AT A BEND AND ALWAYS DIRECT GROUND WIRE DOWN TO GROUND BAR.
2. GROUNDING KIT SHALL BE TYPE AND PART NUMBER AS SUPPLIED OR RECOMMENDED BY CABLE MANUFACTURER.
3. WEATHER PROOFING SHALL BE TWO-PART TAPE KIT, COLD SHRINK SHALL NOT BE USED.

3 CABLE GROUND KIT CONNECTION
SCALE: NOT TO SCALE

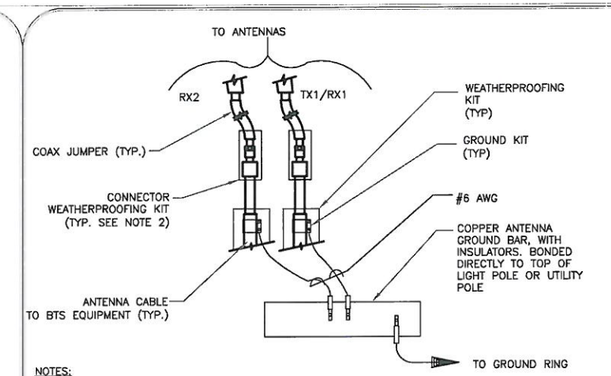

NOTES:

1. DO NOT INSTALL CABLE GROUND KIT AT A BEND AND ALWAYS DIRECT GROUND WIRE DOWN TO ANTENNA GROUND BAR.
2. WEATHER PROOFING SHALL BE TWO-PART TAPE KIT. COLD SHRINK SHALL NOT BE USED.

4 GROUND CABLE CONNECTION
SCALE: NOT TO SCALE

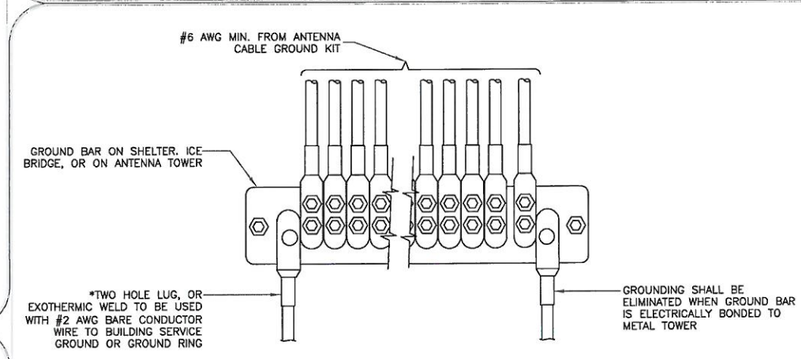

5 GROUNDWIRE INSTALLATION
SCALE: NOT TO SCALE

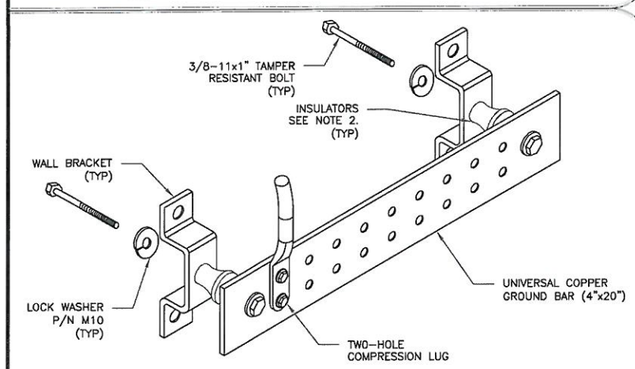

NOTES:

1. DOWN LEAD (HOME RUN) CONDUCTORS ARE NOT TO BE INSTALLED ON CROWN CASTLE TOWER, PER THE GROUNDING DOWN CONDUCTOR POLICY QAS-STD-10091. NO MODIFICATION OR DRILLING TO TOWER STEEL IS ALLOWED IN ANY FORM OR FASHION, CAD-WELDING ON THE TOWER AND/OR IN THE AIR ARE NOT PERMITTED.
2. OMIT INSULATOR WHEN MOUNTING TO TOWER STEEL OR PLATFORM STEEL USE INSULATORS WHEN ATTACHING TO BUILDING OR SHELTERS.

6 GROUND BAR DETAIL
SCALE: NOT TO SCALE

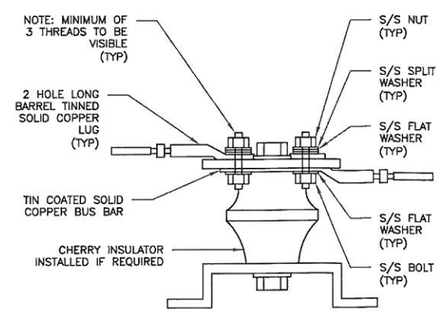

7 LUG DETAIL
SCALE: NOT TO SCALE

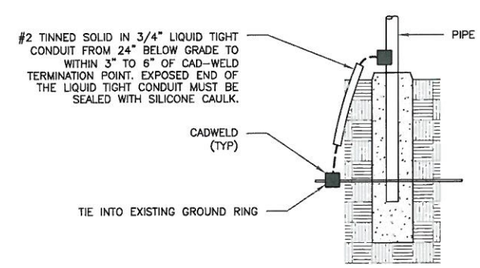

8 TRANSITIONING GROUND DETAIL
SCALE: NOT TO SCALE

Sprint

CROWN CASTLE
1 CITY PLACE DRIVE, SUITE 490
ST. LOUIS, MO 63141

SPRINT SITE NUMBER:
ST03XC115

BU #: **880730**
GRANDVIEW CENTER PLAZA

62 GRANDVIEW PLAZA
FLORISSANT, MO 63033

EXISTING 99'-3" MONOPOLE

ISSUED FOR:

REV	DATE	DRWN	DESCRIPTION	DES./QA
A	09/29/16	AK	PRELIMINARY	LMR
0	10/05/16	AK	CONSTRUCTION	LMR

STATE OF MISSOURI
ANDREW JOSEPH FANDUZZI III
NUMBER
PE-2014040436
PROFESSIONAL ENGINEER

DocuSigned by:
A Fanduzzi
4F3AB9B3CD9024F4...

10/5/2016 | 10:10:00 AM EDT

Crown Castle USA, Inc.
Certification of Authorization #2010006796

IT IS A VIOLATION OF LAW FOR ANY PERSON, UNLESS THEY ARE ACTING UNDER THE DIRECTION OF A LICENSED PROFESSIONAL ENGINEER, TO ALTER THIS DOCUMENT.

SHEET NUMBER: G-2
REVISION: 0

INTRODUCED BY COUNCILMAN HENKE
NOVEMBER 14, 2016

BILL NO. 9233 ORDINANCE NO.

ORDINANCE TO REZONE FOR BRIDLE DEVELOPMENT CORPORATION FOR THE PROPERTY LOCATED AT 2710 N. HWY 67 FROM B-3, EXTENSIVE COMMERCIAL DISTRICT TO B-5, PLANNED COMMERCIAL DISTRICT TO ALLOW FOR THE REDEVELOPMENT OF A SHOPPING CENTER AND CONSTRUCTION OF A SIT-DOWN CARRY-OUT AND DRIVE-THRU RESTAURANT.

WHEREAS, Ordinance No. 1625, as amended, establishes within the City of Florissant district classifications for the purpose of regulating their construction and use of land, buildings and property within the said various districts, and said Ordinance provides the nature, kind and character of buildings that may be erected in each of the said districts and the use to which the land and buildings may be put; and

WHEREAS, the Planning and Zoning Commission of the City of Florissant has recommended to the City Council at their meeting of October 3rd, 2016 that Ordinance No. 1625 be amended to change the classification of the property at 2710 N. Hwy 67 from B-3, Extensive Commercial District to B-5 Planned Commercial District ; and

WHEREAS, due and lawful notice of a public hearing no. 16-10-031 on said proposed zoning change was duly published, opened on October 24, 2016 at 7:30 P.M. by the Council of the City of Florissant; and

WHEREAS, the Council, following said public hearing, and after due and careful deliberation, has concluded that the amendment of Ordinance No. 1625, as amended, as hereinafter set forth, to be in the best interest of the public health, safety and welfare of the City of Florissant; and

NOW, THEREFORE, BE IT ORDAINED BY THE COUNCIL OF THE CITY OF FLORISSANT, ST. LOUIS COUNTY, MISSOURI, AS FOLLOWS:

Section 1: Ordinance No. 1625, as amended, is hereby further amended by changing the classification of the property located at 2710 N. Highway 67 from ‘B-3’ Extensive Business District to a ‘B-5’ Planned Commercial District to allow for the redevelopment of the shopping center and a sit-down, carryout restaurant with drive-up service.

I. PROJECT DESCRIPTION:

The property is approximately 4.08 acres to be subdivided into 2 lots. Lot A is proposed to be 1.18 acres, with a new restaurant. The proposed building will be 3598 square feet. Drawings included are V-3 Sub. Plat dated 7/29/16, 1 of 3 (Preliminary Site Development Plan), 2 of 3 (Preliminary Site Grading Plan), 3 of 3 (Site Sections) all dated 9/16/16, L1.0 dated , E1.1 with photometrics, Color Rendered Elevations are on A04.1 and A04.2 printed Sept. 2016.

BUILDING DESIGN:
The exterior of the building is proposed to be constructed of brick and EIFS. There are also a metal canopies, downspouts, gates and trim.

PARKING, DRIVEWAYS AND STACKING:
There are 40 parking spaces shown that will be 9 feet wide by 19 feet long. Parking spaces are shown provided on three sides of the property. There will be a dual one-way drive around the building and a two way drive along the north side of the building. The stacking area will contain at least 6 vehicles. There is one curb cut onto the highway and one proposed as a right turn out only. A connection between this property and the adjacent shopping center is shown.

WALKWAYS:
There is one new walkway proposed to allow people to access the restaurant by way of a building walk Other front walkway improvements in accord with the Lindbergh Improvement Program is recommended by staff.

LANDSCAPING:
The proposed landscape plan is L1.0. The number of landscaped islands in and around the main parking area exceeds the code requirement. There are landscape beds on all sides of the building containing a variety of shrubs with mulch beds which exceed the number required by the code since the code will require approximately 50 shrubs for building plantings per perimeter walls. Since the building is about 65x55, the required number of shrubs for building planting is approximated at 50, also 6 frontage trees are required and 3 landscaped islands. Therefore the proposed plan exceeds the requirements for landscape:

Irrigation will be required since the site is over 1 acre.

STORMWATER AND SANITARY SEWER:
The grading preliminary plan shows the proposed concept of storm water management, Sheet 2 of 3. There grate inlets shown for this development and concrete pavement in the curb cut and dumpster area.

SITE LIGHTING:
As indicated on Sheet **E1.1**, There are four light poles provided on the site. The Photometric drawing indicates the light level range on site.

SIGNAGE:
The proposal includes a proposed 40 foot setback for the pole sign shown in the island west of the proposed new building. Wall signs are shown as metal signs mounted to the masonry. No directional signs at the entrances are shown. There will also be a menu board for the drive up order lanes. The mural and the drive-through signs appear to be the only signs that are exceeding 40 s.f. The mural scales 7 x11'-8" which is 82 s.f. and the flame is probably close to 40 s.f. There will also be four oval wall signs less than 40 s.f.

II. EXISTING SITE CONDITIONS:
The property currently has a vacant bank building to be removed and parking area which must continue to undergo a subdivision process.

III. SURROUNDING PROPERTIES:
The property to the West is an Auto Parts store in a 'B-3' District, the properties to the south are in the 'R-4' Single Family Dwelling District and includes 2735, 2745, 2765, 2785, 2795, 2805 and 2815 Sorrell Drive.

IV. STAFF ANALYSIS:
The building as proposed is not in compliance with the masonry ordinance and therefore must have approval of EIFS materials. **The petitioner proposes brick facades with EIFS towers and wall areas.** It is shown on the plans that the trash enclosure is proposed to be constructed of **masonry to compliment the building,** the gates proposed are shown as solid metal. The height of the building is a maximum of twenty three feet seven inches in height.

The parking number of spaces **is short** to comply with the zoning code, a cross parking easement should relieve the shortage since the number of spaces in the adjacent shopping center far exceed the number required.

The site landscaping complies with the landscaping ordinance for the restaurant lot. However, **staff recommends** that the landscaping **along the frontage** should be designed to comply with the Lincor Enhancement Project. This **would** affect trees, street lighting and sidewalks along the front of the property.

Because this is proposed as a commercially zoned property the zoning code requires screening from residentially zoned properties. There is an existing fence shown to remain for screening from residential lots.

Because this property is over one acre, an irrigation system **is** required per section 405.250 of the zoning code.

The petitioner is aware that to adjust the property lines, a Major Subdivision is required along with a full site development plan. Sometimes the subdivision process may run concurrently. In this case, the petitioner will need to run the processes staggered, or semi-concurrently.

VI. STAFF RECOMENDATIONS:

1. Subject to Council Approval, that all exterior walls be constructed of masonry per section 500.040 of the City Code including brick veneer anywhere below 3 feet above grade.
2. The landscaping along the North Highway 67 property line be revised to conform to the Lincor Enhancement Project.
3. Any proposed digital sign be regulated to 10 second static images, no affects between images.
4. Both properties subdivided should be subdivided per the City regulations for a Major Subdivision.
5. Since there is little landscape on the remaining shopping center property, landscaping, landscaping of parking lot islands and Lin-Cor Improvements may be considered for this property with a reduction in parking spaces.

September 29, 2016 Suggested Motion

I move to recommend approval of a rezoning of **2710 N. Highway 67** from 'B-3' to a 'B-5' Planned Commercial District to allow redevelopment of a shopping center and a sit-down, carryout and drive-thru restaurant subject to the conditions set forth below with these conditions being part of the record:

1. **All exterior walls be constructed of masonry to a point 36" above grade, per section 500.040 of the City Code.**
2. **The landscaping along the North Highway 67 property line shall be revised to conform to the Lincor Enhancement Project for both subdivided properties.**
3. **The proposed sign shall be located where shown, but any digital sign shall be limited to 10 second static images with no affects between images.**
4. **Both parcels shown shall be subdivided per the City regulations for a Major Subdivision**
5. **A plan for the shopping center portion shall be submitted to the Building Commissioner for approval and shall include landscape and lighting photometric.**

1. **PERMITTED USES**

The use permitted in this 'B-5' Planned Commercial District shall be limited to a sit down, carry out and drive-thru restaurant.

2. **FLOOR AREA, HEIGHT AND BUILDING REQUIREMENTS**

The building space shall be limited to a single story 3598 square foot building.

3. **PERFORMANCE STANDARDS**

In addition to all other requirements, uses within the "B-5" Planned Commercial District shall conform to the most restrictive performance standards as follows:

1. Vibration. Every use shall be so operated that the maximum ground vibration generated is not perceptible without instruments at any point on the lot line of the lot on which the use is located.
2. Odor. Every use shall be so operated that no offensive or objectionable odor is perceptible at any point on the lot line on which the use is located.
3. Smoke. Every use shall be so operated that no smoke from any source shall be emitted of a greater density than the density described as No. 1 on the Ringelmann Chart as published by the United States Bureau of Mines.
4. Toxic gases. Every use shall be so operated that there is no emission of toxic, noxious or corrosive fumes or gases.
5. Emission of dirt, dust, fly ash and other forms of particulate matter. Emission of dirt, dust, fly ash and other forms of particulate matter shall not exceed eighty-five one-hundredths (0.85) pounds per one thousand (1,000) pounds of gases of which amount not to exceed five-tenths (0.5) pound per one thousand (1,000) pounds of gases shall be of such size as to be retained on a 325-mesh U.S. standard sieve. In the case of emission of fly ash or dust from a stationary furnace or a combustion device, these standards shall apply to a condition of fifty percent (50%) excess air in the stack at full load, which standards shall be varied in proportion to the deviation of the percentage of excess air from fifty percent (50%).
6. Radiation. Every use shall be so operated that there is no dangerous amount of radioactive emissions.
7. Glare and heat. Any operation producing intense glare or heat shall be performed in an enclosure in such a manner as to be imperceptible along any lot line.
8. Screening.
   a. All mechanical equipment, air-handling units, cooling towers, condensers, etc., on roof or grade shall be screened architecturally in such a manner as to be a part of the design of the building.
   b. Incinerators and stacks shall be enclosed in the same material as the main exterior building material.

4. **TRASH ENCLOSURES**

Trash container shall be kept within a **metal gated** sight-proof fenced area.

5. **PLAN SUBMITTAL REQUIREMENTS**

A final site development plan shall be submitted to the Building Commissioner to review for compliance to this ordinance and other city ordinances prior to issuance of land disturbance permits or building permits. Final Development Plan shall include improvements as shown on **Drawings V-3 Sub. Plat dated 7/29/16, 1 of 3 (Preliminary Site Development Plan), 2 of 3 (Preliminary Site Grading Plan), 3 of 3 (Site Sections) all dated 9/16/16, L1.0 dated 9/14/16, E1.1 with photometrics, Color Rendered Elevations are on A04.1 and A04.2 printed Sept. 2016.**

3. **SITE DEVELOPMENT PLAN CRITERIA:**

a. Height, Area And Bulk Restrictions:

1. Height, Area And Bulk Regulations. The height, area and bulk regulations for uses in the "B-3" Extensive Commercial District

b. Internal Drives:

(1) There shall be parking to be indicated on the Final Development Plan.

c. Minimum Parking/Loading Space Requirements.

(1) There shall be a minimum of **40** parking spaces provided on the property.
(2) A cross parking easement shall be recorded to allow additional parking for the restaurant to meet regulations.

d. Road Improvements, Access and Sidewalks

Final Development shall include Lindbergh (Lin-Cor) Improvement Plan enhancements along the entire frontage.

e. Lighting Requirements.

Lighting of the property shall comply with the following standards and requirements:

(1) The light level for parking lot lighting shall be 0.5 fc minimum as indicated on **E1.1 attached.**

(2) All site lighting and exterior building lighting shall be directed down and inward.

f. Sign Requirements.

(1) **There shall be one new post sign as shown located on the 1 of 3 (Preliminary Site Development Plan) dated 9/16/16 attached.**
(2) **There shall be wall signage with a metal mural and drive-through arrow as shown on the Rendered Elevations A04.1 and A04.2 attached.**

(3) All other signage shall comply with the City of Florissant sign ordinance for commercial districts.

g. Landscaping and Fencing.

(1) Landscaping indicated on Landscape Plan for the restaurant **shall be as shown on the attached L1.0 dated 9/14/16.**

(2) Any modifications to the landscaping shall be reviewed and approved by the **Building Commissioner including a landscape plan for the shopping center subdivided parcel.**

h. Storm Water.

Storm Water and drainage facilities shall comply with the following standards and requirements:

(1) The Director of Public Works shall review the storm water plans to assure that storm water flow will have no adverse affect the neighboring properties.

(2) No building permits shall be issued until the storm water plan has been approved by the St. Louis Metropolitan Sewer District.

i. Miscellaneous Design Criteria.

(1) All applicable parking, circulation, sidewalks, and all other site design features shall comply with the Florissant City Code.

(2) All dumpsters and grease containers shall be contained within a trash enclosure with gates, compatible with existing building.

(3) All storm water and drainage facilities shall be constructed, and all landscaping shall be installed, prior to occupancy of the building, unless remitted by the Director of Public Works due to weather related factors.

(4) All mechanical equipment, electrical equipment, and communication equipment shall be screened in accordance with the Florissant Zoning Code.

(5) The exterior design of the buildings shall be constructed in accordance with the renderings as approved by the Florissant Planning and Zoning Commission and attached hereto.

(6) All other requirements of the Florissant Municipal Code and other ordinances of the city shall be complied with unless otherwise allowed by this ordinance.

7. **FINAL SITE DEVELOPMENT PLAN**

A final site development plan shall be submitted to the Building Commissioner to review for compliance with the applicable "B-5" Planned Commercial Development ordinance prior to recording. Any variations from the ordinance approved by the City Council and/or the conceptual plans attached to such

ordinance shall be processed in accordance with the procedure established in the Florissant Zoning Code.

8. **AMENDMENTS TO THE SITE AND EXTERIOR BUILDING PLANS:**
Any changes to the approved plans attached hereto must be reviewed by the Building Commissioner. The Building Commissioner must make a determination as to the extent of the changes per the following procedure:

1. The property owner or designate representative shall submit in writing a request for an amendment to the approved plans. The building commissioner shall review the plans for consistency with the purpose and content of the proposal as originally or previously advertised for public hearing and shall make an advisory determination.
2. If the building commissioner determines that the requested amendment is not consistent in purpose and content with the nature of the purpose as originally proposed or previously advertised for the public hearing, then an amendment to the special use permit shall be required and a review and recommendation by the planning and zoning commission shall be required and a new public hearing shall be required before the City Council.
3. If the building commissioner determines that the proposed revisions are consistent with the purpose and content with the nature of the public hearing then a determination of non-necessity of a public hearing shall be made.
4. Determination of minor changes: If the building commissioner determines that an amendment to the special use permit is not required and that the changes to the plans are minor in nature the Building Commissioner may approve said changes.
5. Determination of major changes: If the Building Commissioner determines that an amendment to the B-5 is not required but the changes are major in nature, then the owner shall submit an application for review and approval by the Planning and Zoning commission.

9. **VERIFICATION PRIOR TO OCCUPANCY PERMIT**

a. Any new roadway improvements shall be completed prior to the issuance of any final occupancy permit.

b. Any new stormwater detention shall be completed prior to the issuance of any occupancy permit.

c. All fencing and/or landscaping intended as screening properties shall be completed prior to the issuance of any occupancy permit, unless remitted by the Director of Public Works due to weather related factors.

10. **GENERAL DEVELOPMENT CONDITIONS.**

a. Unless, and except to the extent, otherwise specifically provided herein, development shall be effected only in accordance with all ordinances of the City of Florissant.

b. The Department of Public Works shall enforce the conditions of this ordinance in accordance with the Final Site Development Plan approved by the Planning & Zoning Commission and all other ordinances of the City of Florissant.

9. **PROJECT COMPLETION.**
Construction shall start within 90 days of the issuance of building permits for the project and shall be developed in accordance of the approved final development plan within 12 months of start of construction.

Section 2: The application and preliminary plans are returned to the Building Commissioner for consideration of a Final Site Development Plan, pursuant to Title IV of the Florissant Zoning Ordinance.

Section 3: Failure to develop the said Planned Commercial District in accordance with the above-described procedures and restrictions shall be cause for revision of the zoning of said property back to the previous zoning classification, in accordance with Title IV of the Florissant Zoning Ordinance.

Section 4: This ordinance shall become in full force and effect immediately upon its passage and approval.

Adopted this _____ day of _____, 2016.

_____
Jackie Pagano
President of the Council
City of Florissant

Approved this _____ day of _____, 2016.

_____
Thomas P. Schneider
Mayor, City of Florissant

ATTEST:

_____
Karen Goodwin, MMC/MRCC
City Clerk

CITY OF FLORISSANT

PUBLIC HEARING NOTICE

A Public Hearing will be held by the Florissant City Council in the Council Chambers, 955 rue St. Francois, Florissant, MO., on Monday, October 24, 2016 at 7:30 p.m. on the following proposition, to-wit:

To rezone for Bridle Development Corporation for the property located at 2710 N. Hwy 67 from B-3, Extensive Commercial District to B-5, Planned Commercial District to allow for the redevelopment of a shopping center and construction of a sit-down, carry-out and drive-thru restaurant.

Citizens will have an opportunity to be heard. Anyone with special needs should contact the City Clerk at least 5 days before said public hearing by calling 839-7630 or TDD 839-5142.

CITY OF FLORISSANT, Karen Goodwin, City Clerk MMC.

APPLICATION TO THE CITY OF FLORISSANT PLANNING AND ZONING COMMISSION TO ESTABLISH A B-5 PLANNED COMMERCIAL DISTRICT

PLANNING & ZONING ACTION:

RECOMMENDED APPROVAL
PLANNING & ZONING
CHAIRMAN

SIGN. DATE: 10/3/2016

Address of Property:

2710 N. Highway 67

Council Ward _____ Zoning _____

Initial Date Petitioner Filed_____
Building Commissioner to complete ward, zoning & date filed

PETITION FOR A B-5 RE-ZONING:

1) Comes Now Bridle Development Corp.
(Individual's name, corporation, partnership, etc.)
Enter name of petitioner. If a corporation, state as such. If applicable include DBA (Doing Business As).

and states to the Planning and Zoning Commission that he (she) (they) has (have) the following legal interest in the tract of land located in the City of Florissant, State of Missouri, described on page 3 of this petition.

Legal interest in the Property Owner of property
State legal interest in the property. (i.e., owner of property, lease); also submit copy of deed or lease or letter of authorization from owner to seek a special use.

A. The petitioner (s) hereby states that he (she) (they) is (are) submitting a description of the property for which the Permit is petitioned by giving bearings & distances (metes and bounds). Not required if description is identical to "B".

B. The petitioner (s) hereby states that he (she) (they) is (are) submitting a survey or plat of the property drawn to a scale of 100 feet or less to the inch, referenced to a point easily located on the ground as street intersection, centerline of creek having a generally known name, etc., showing dimensions, bearings and distances of the property, north arrow and scale.

C. Acreage to nearest tenth of an acre of the property for which rezoning is petitioned 4.08 acres

2. The petitioner(s) hereby further state(s) that the property herein described in this petition is presently zoned in a B-3 District and is presently being used for: Retail shopping center

State current use of property, (or, state: vacant).

3. The petitioner(s) hereby state(s) the following purpose to justify the re-zoning to a B-5:
Request to rezone to B-5 as part of the City of Florissant redevelopment requirements in order to subdivide the property,redevelop the shopping center and construct a Raising Cane's Chicken Fingers drive-thru restaurant

List purpose for this request.

4. The petitioner(s) further states(s) that they (he) (she) can comply with all of the requirements of the City of Florissant, including setback lines and off-street parking.

5. The petitioner(s) further state(s) that they (he) (she) further represent(s) and warrants that they (he) (she) has (have) not made any arrangement to pay any commission, gratuity or consideration, directly or indirectly, to any official employee or appointee of the City of Florissant, with respect to this application.

PRINT PETITIONER'S NAME Thomas V. Lane, President
Print Name

PETITIONER(S) SIGNATURE (S) _____

FOR Bridle Development Corp.
(company, corporation, partnership)

Print and sign application. If applicant is a corporation or partnership signature must be a CORPORATE OFFICER or LLC Managing PARTNER. NOTE: Corporate officer is an individual named in corporate papers.

6. I (we) hereby certify that (indicate one of the following):
( ) I (we) have a legal interest in the herein above described property.
( ) I am (we are) the duly appointed agent(s) of the petitioner (s), and that all information given here is true and a statement of fact.

Petitioner may assign an agent to present petition to the Commission and Council. The agent must sign the petition in this section, and provide address and telephone number

SIGNATURE _____

ADDRESS 308 TCW Court Lake Saint Louis MO 63367
STREET CITY STATE ZIP CODE

TELEPHONE NUMBER 314-925-7452 Premier Civil Engineering
BUSINESS

I (we) the petitioner (s) do hereby appoint Matthew Fogarty as
Print name of agent.

my (our) duly authorized agent to represent me (us) in regard to this petition.

_____
Signature of Petitioner(s) or Authorized Agent

NOTE: Be advised when the petitioner and/or his duly authorized agent appears before the Planning and Zoning Commission and make the presentation, the same individuals must also appear before the City Council for that presentation. Also if the descriptions of plats or surveys are incorrect, or if the petition form is not correctly and completely filled out it will be returned for corrections and may have to be re-submitted.

Please check the box for the appropriate type of operation then fill in applicabe section (a), (b) or (c). Corporations are to submit copy of Missouri corporate papers with registration papers.

1) Type of Operation: Individual: [ ] Partnership: [ ] Corporation/LLC: [x]

(a) If an Individual:

(1) Name and Address _____

(2) Telephone Number _____

(3) Business Address _____

(4) Date started in business _____

(5) Name in which business is operated if different from (1) _____

(6) If operating under a fictitious name, provide the name and date registered with the State of Missouri, and a copy of the registration.

(b) If a Partnership:

(1) Names & addresses of all partners _____

(2) Telephone numbers _____

(3) Business address _____

(4) Name under which business is operated _____

(5) If operating under fictitious name, provide date the name was registered with the State of Missouri, and a copy of the registration.

(c) If a Corporation or LLC:

(1) Names & addresses of all partners Bridle Development Corp., 727 Craig Rd, Suite 100,St Louis Mo 63141

(2) Telephone numbers 314-567-9944

(3) Business address 727 Craig Rd, Suite 100, St. Louis, MO 63141

(4) State of corporation & a photocopy of incorporation papers _____

(5) Date of corporation August 9, 1960

(6) Missouri Corporate Number 00099746

(7) If operating under fictitious name, provide the name and date registered with the State of Missouri, and a copy of registration. _____

(8) Name in which business is operated _____

(9) If the property location is in a strip center, give dimensions of your space under square footage and do not give landscaping information.

Please fill in applicable information requested.

Name Premier Civil Engineering

Address 308 TCW Court, Lake Saint Louis, MO 63367

Property Owner Bridle Development Corp.

Location of property 2710 N. Highway 67

Dimensions of property Irregular Dimensions 542.95' x 278.26' x 680.16' x 347.79' (4.08 Acres)

Current Use of Property Retail Shopping Center

Proposed Use of Property Retail Shopping Center and Drive-thru Restaurant

Type of Sign Existing Pylon/ New Pylon Height 40'

Type of Construction Demo and new construction Number Of Stories. 1

Square Footage of Building 3,598 SF Restaurant/24,112 SF Retail Number of Curb Cuts 2 existing and 1 modified

Number of Parking Spaces 40 Restaurant/193 Retail Sidewalk Length 45' new

Landscaping: No. of Trees _____ Diameter _____

No. of Shrubs _____ Size _____

Fence: Type Existing Wood Length 84' Height 6'

PLEASE SUBMIT NINE (9) FOLDED COPIES OF THE FOLLOWING:

1. Plan or drawing showing zoning of adjoining properties.
2. Plan or drawing showing location of property in relation to major streets and all adjoining properties.
3. Drawing showing measurement of tract and overall area of tract.
4. Plan or drawing showing proposed parking layout, landscaping, parking lighting, signage and trash enclosure.

PROVIDE LEGAL DESCRIPTION OF PROPERTY PERTAINING TO THIS PETITION

(Close legal description with acreage to the nearest tenth of an acre).

Provide a legal description of the property. If part of a shopping center list address and state part of what shopping center (i.e.: 351 N. Highway 67 part of Florissant Meadows Shopping Center). If property is a single lot, list full written legal description with bearings and distances.

A TRACT OF LAND BEING PART OF BLOCKS 21 AND 32 OF THE COMMONS OF THE TOWN OF ST. FERDINAND, TOWNSHIP 47 NORTH, RANGE 6 EAST ST. LOUIS COUNTY MISSOURI AND BEING MORE PARTICULARLY DESCRIBED AS FOLLOWS:
BEGINNING AT THE INTERSECTION OF THE EAST LINE OF SAID BLOCK 21 AND THE SOUTHEAST LINE OF U.S. HIGHWAY 67 (FORMERLY STATE HIGHWAY 140, A.K.A. LINDBERGH BOULEVARD) AS WIDENED BY DEED BOOK 6217, PAGE 143 OF THE ST. LOUIS COUNTY RECORDS SAID POINT OF INTERSECTION BEING 45.00 FEET PERPENDICULAR DISTANCE SOUTHEASTERLY OF THE CENTERLINE OF SAID HIGHWAY 67; THENCE WITH THE EAST LINE OF SAID BLOCK 21 SOUTH 01°14'20" WEST A DISTANCE OF 347.79 FEET TO A POINT ON THE NORTHWEST LINE OF SURREY MEADOWS PLAT TWO AS RECORDED IN PLAT BOOK 108, PAGES 66 & 67 OF THE COUNTY RECORDS; THENCE WITH SAID NORTHWEST LINE SOUTH 56°48'30" WEST A DISTANCE OF 542.95 FEET TO THE INTERSECTION OF SAID NORTHWEST LINE AND THE NORTHEAST LINE OF A TRACT NOW OR FORMERLY IN THE NAME OF OTTO PARTNERS AS RECORDED IN DEED BOOK 8764, PAGE 1544 OF THE COUNTY RECORDS; THENCE WITH THE NORTHEAST LINE OF SAID OTTO PARTNERS TRACT NORTH 33°11'30" WEST A DISTANCE OF 278.26 FEET TO THE SOUTHEAST LINE OF AFOREMENTIONED HIGHWAY 67, SAID POINT BEING 45.00 FOOT RADIAL DISTANCE FROM THE CENTERLINE OF SAID HIGHWAY AND BEING A POINT ON A CURVE FOR WHICH THE RADIUS POINT BEARS NORTH 33°40'20" WEST A DISTANCE OF 34,422.49 FEET; THENCE NORTHEASTERLY WITH SAID CURVE AN ARC DISTANCE OF 121.76 FEET TO A POINT 45.00 FEET RADIAL DISTANCE RIGHT OF P.T. STATION 208+05.9; THENCE NORTH 56°07'30" EAST A DISTANCE OF 64.10 FEET TO A POINT 45.00 FEET PERPENDICULAR DISTANCE RIGHT OF CENTERLINE STATION 208+70; THENCE NORTH 62°06'32" EAST A DISTANCE OF 47.96 FEET TO A POINT 50.00 FEET PERPENDICULAR DISTANCE RIGHT OF CENTERLINE STATION 209+20 (STATION EQUATION AT 208+97.7 BK = 209+00 AH.); THENCE NORTH 58°22'15" EAST A DISTANCE OF 255.20 FEET TO A POINT 60.00 FEET
PERPENDICULAR DISTANCE RIGHT OF CENTERLINE STATION 211+75; THENCE NORTH 25°09'40" EAST A DISTANCE OF 29.15 FEET TO A POINT 45.00 FEET PERPENDICULAR DISTANCE RIGHT OF CENTERLINE STATION 212+00; THENCE NORTH 56°07'30" EAST A DISTANCE OF 226.08 FEET TO THE POINT OF BEGINNING.

PROVIDE LOCATION MAP SHOWING AREA INVOLVING THIS PETITION

Provide a drawing of a location map showing the nearest major intersection or include on plans.

FLORISSANT PLANNING & ZONING COMMISSION APPLICATION

City Of Florissant – Public Works
314-839-7648

Application is hereby made to the Building Commissioner of the Department of Public works Office at the City of Florissant, Missouri, to appear before the Planning & Zoning Commission

Please Print or Type The Following Information

Property Address: 2710 N. Highway 67

Property Owners Name: Bridle Development Corp. Phone #: 314-567-9944

Property Owners Address: 727 Craig Road, Suite 100

Business Owners Name: Raising Cane's Restaurants LLC Phone #: 972-769-3364

Business Owners Address: 6800 Bishop Rd. Plano, TX 75024

DBA **(Doing Business As)** Raising Cane's Chicken Fingers

Authorized Agents Name: Matthew Fogarty CO. Name: Premier Civil Engineering
(Authorized Agent to Appear Before The Commission)

Agents Address: 308 TCW Court, Lake Saint Louis, MO 63367 Phone #: 314-925-7452

Request Rezone site to B-5 for redevelopment of shopping center and construction of a Raising Cane's Chicken Fingers drive -thru restaurant

State complete request (print or type only).

IF A TRAFFIC STUDY IS REQUIRED FOR CERTAIN DEVELOPMENTS AND USES THE COST OF THE TRAFFIC STUDY SHALL BE PAID BY THE APPLICANT. PLEASE SUBMIT FOLDED PLANS

Applicant's Signature **Date**

OFFICE USE ONLY

Received by: CK Receipt # 1659 9249 Amount Paid: 125.00 Date: 9/20/16

STAFF REMARKS:

DATE APPLICATION REVIEWED:

SIGNATURE OF STAFF WHO REVIEWED APPLICATION

COMMISSION ACTION TAKEN:

RECOMMENDED APPROVAL
PLANNING & ZONING
CHAIRMAN

SIGN: DATE: 10/3/20

MEMORANDUM

CITY OF FLORISSANT- BUILDING DEPARTMENT

"Preserve and improve the health, safety, and welfare of our residents, businesses and the general public in the City of Florissant; while at the same time maintaining property values and improving the quality of life in the City of Florissant."

To: Planning and Zoning Commissioners Date: September 29, 2016

From: Philip E. Lum, AIA-Building Commissioner c: Louis B. Jearls, Jr. - P.E.,
PWLF Director Public Works
Deputy City Clerk
Applicant
File

Subject: Request Recommended Approval of a **Rezoning to a 'B-5' at 2710 N. Highway 67 Raising Cane's** in an existing 'B-3' Zoning District.

STAFF REPORT
CASE NUMBER PZ-100316-2

I. PROJECT DESCRIPTION:

The request before the commission is to rezone the property located at 2710 N. Highway 67 from 'B-3' Extensive Business District to a 'B-5' Planned Commercial District to allow for the redevelopment of the shopping center and a sit-down, carryout restaurant with drive-up service. The property is approximately 4.08 acres to be subdivided into 2 lots. Lot A is proposed to be 1.18 acres, with a new restaurant. The proposed building will be 3598 square feet. **Drawings included are V-3 Sub. Plat dated 7/29/16, 1 of 3 (Preliminary Site Development Plan), 2 of 3 (Preliminary Site Grading Plan), 3 of 3 (Site Sections) all dated 9/16/16, L1.0 dated , E1.1 with photometrics, Color Rendered Elevations are on A04.1 and A04.2 printed Sept. 2016.**

BUILDING DESIGN:

The exterior of the building is proposed to be constructed of brick and EIFS. There are also a metal canopies, downspouts, gates and trim.

PARKING, DRIVEWAYS AND STACKING:

There are 40 parking spaces shown that will be 9 feet wide by 19 feet long. Parking spaces are shown provided on three sides of the property. There will be a dual one-way

drive around the building and a two way drive along the north side of the building. The stacking area will contain at least 6 vehicles. There is one curb cut onto the highway and one proposed as a right turn out only. A connection between this property and the adjacent shopping center is shown.

WALKWAYS:
There is one new walkway proposed to allow people to access the restaurant by way of a building walk Other front walkway improvements in accord with the Lindbergh Improvement Program is recommended by staff.

LANDSCAPING:
The proposed landscape plan is L1.0. The number of landscaped islands in and around the main parking area exceeds the code requirement. There are landscape beds on all sides of the building containing a variety of shrubs with mulch beds which exceed the number required by the code since the code will require approximately 50 shrubs for building plantings per perimeter walls. Since the building is about 65x55, the required number of shrubs for building planting is approximated at 50, also 6 frontage trees are required and 3 landscaped islands. Therefore the proposed plan exceeds the requirements for landscape:

Irrigation will be required since the site is over 1 acre.

STORMWATER AND SANITARY SEWER:
The grading preliminary plan shows the proposed concept of storm water management, Sheet 2 of 3. There grate inlets shown for this development and concrete pavement in the curb cut and dumpster area.

SITE LIGHTING:
As indicated on Sheet **E1.1**, There are four light poles provided on the site. The Photometric drawing indicates the light level range on site.

SIGNAGE:
The proposal includes a proposed 40 foot setback for the pole sign shown in the island west of the proposed new building. Wall signs are shown as metal signs mounted to the masonry. No directional signs at the entrances are shown. There will also be a menu board for the drive up order lanes. The mural and the drive-through signs appear to be the only signs that are exceeding 40 s.f. The mural scales 7 x11'-8" which is 82 s.f. and the flame is probably close to 40 s.f. There will also be four oval wall signs less than 40 s.f.

<u>II. EXISTING SITE CONDITIONS</u>:
The property currently has a vacant bank building to be removed and parking area which must continue to undergo a subdivision process.

III. SURROUNDING PROPERTIES:

The property to the West is an Auto Parts store in a 'B-3' District, the properties to the south are in the 'R-4' Single Family Dwelling District and includes 2735, 2745, 2765, 2785, 2795, 2805 and 2815 Sorrell Drive.

IV. STAFF ANALYSIS:

The building as proposed is not in compliance with the masonry ordinance and therefore must have approval of EIFS materials. **The petitioner proposes brick facades with EIFS towers and wall areas.** It is shown on the plans that the trash enclosure is proposed to be constructed of **masonry to compliment the building,** the gates proposed are shown as solid metal. The height of the building is a maximum of twenty three feet seven inches in height.

The parking number of spaces **is short** to comply with the zoning code, a cross parking easement should relieve the shortage since the number of spaces in the adjacent shopping center far exceed the number required.

The site landscaping complies with the landscaping ordinance for the restaurant lot. However, **staff recommends** that the landscaping **along the frontage** should be designed to comply with the Lincor Enhancement Project. This **would** affect trees, street lighting and sidewalks along the front of the property.

Because this is proposed as a commercially zoned property the zoning code requires screening from residentially zoned properties. There is an existing fence shown to remain for screening from residential lots.

Because this property is over one acre, an irrigation system **is** required per section 405.250 of the zoning code.

The petitioner is aware that to adjust the property lines, a Major Subdivision is required along with a full site development plan. Sometimes the subdivision process may run concurrently. In this case, the petitioner will need to run the processes staggered, or semi-concurrently.

VI. STAFF RECOMENDATIONS:

1. Subject to Council Approval, that all exterior walls be constructed of masonry per section 500.040 of the City Code including brick veneer anywhere below 3 feet above grade.
2. The landscaping along the North Highway 67 property line be revised to conform to the Lincor Enhancement Project.
3. Any proposed digital sign be regulated to 10 second static images, no affects between images.

4. Both properties subdivided should be subdivided per the City regulations for a Major Subdivision.
5. Since there is little landscape on the remaining shopping center property, landscaping, landscaping of parking lot islands and Lin-Cor Improvements may be considered for this property with a reduction in parking spaces.

September 29, 2016 Suggested Motion

I move to recommend approval of a rezoning of **2710 N. Highway 67** from 'B-3' to a 'B-5' Planned Commercial District to allow redevelopment of a shopping center and a sit-down, carryout and drive-thru restaurant subject to the conditions set forth below with these conditions being part of the record:

1. **All exterior walls be constructed of masonry to a point 36" above grade, per section 500.040 of the City Code.** w/exception of #1 tower.
2. **The landscaping along the North Highway 67 property line shall be revised to conform to the Lincor Enhancement Project for both subdivided properties.**
3. **The proposed sign shall be located where shown, but any digital sign shall be limited to 10 second static images with no affects between images.** Shall conform once adopted.
4. **Both parcels shown shall be subdivided per the City regulations for a Major Subdivision**
5. **A plan for the shopping center portion shall be submitted to the Building Commissioner for approval and shall include landscape and lighting photometric.**

1. **PERMITTED USES**

The use permitted in this 'B-5' Planned Commercial District shall be limited to a sit down, carry out and drive-thru restaurant.

2. **FLOOR AREA, HEIGHT AND BUILDING REQUIREMENTS**

The building space shall be limited to a single story 3598 square foot building.

3. **PERFORMANCE STANDARDS**

In addition to all other requirements, uses within the "B-5" Planned Commercial District shall conform to the most restrictive performance standards as follows:

1. Vibration. Every use shall be so operated that the maximum ground vibration generated is not perceptible without instruments at any point on the lot line of the lot on which the use is located.
2. Odor. Every use shall be so operated that no offensive or objectionable odor is perceptible at any point on the lot line on which the use is located.
3. Smoke. Every use shall be so operated that no smoke from any source shall be emitted of a greater density than the density described as No. 1 on the Ringelmann Chart as published by the United States Bureau of Mines.
4. Toxic gases. Every use shall be so operated that there is no emission of toxic, noxious or corrosive fumes or gases.

5. Emission of dirt, dust, fly ash and other forms of particulate matter. Emission of dirt, dust, fly ash and other forms of particulate matter shall not exceed eighty-five one-hundredths (0.85) pounds per one thousand (1,000) pounds of gases of which amount not to exceed five-tenths (0.5) pound per one thousand (1,000) pounds of gases shall be of such size as to be retained on a 325-mesh U.S. standard sieve. In the case of emission of fly ash or dust from a stationary furnace or a combustion device, these standards shall apply to a condition of fifty percent (50%) excess air in the stack at full load, which standards shall be varied in proportion to the deviation of the percentage of excess air from fifty percent (50%).
6. Radiation. Every use shall be so operated that there is no dangerous amount of radioactive emissions.
7. Glare and heat. Any operation producing intense glare or heat shall be performed in an enclosure in such a manner as to be imperceptible along any lot line.
8. Screening.
   a. All mechanical equipment, air-handling units, cooling towers, condensers, etc., on roof or grade shall be screened architecturally in such a manner as to be a part of the design of the building.
   b. Incinerators and stacks shall be enclosed in the same material as the main exterior building material.

4. **TRASH ENCLOSURES**

Trash container shall be kept within a **metal gated** sight-proof fenced area.

5. **PLAN SUBMITTAL REQUIREMENTS**

A final site development plan shall be submitted to the Building Commissioner to review for compliance to this ordinance and other city ordinances prior to issuance of land disturbance permits or building permits. Final Development Plan shall include improvements as shown on **Drawings V-3 Sub. Plat dated 7/29/16, 1 of 3 (Preliminary Site Development Plan), 2 of 3 (Preliminary Site Grading Plan), 3 of 3 (Site Sections) all dated 9/16/16, L1.0 dated 9/14/16, E1.1 with photometrics, Color Rendered Elevations are on A04.1 and A04.2 printed Sept. 2016.**

3. **SITE DEVELOPMENT PLAN CRITERIA:**

a. Height, Area And Bulk Restrictions:

1. Height, Area And Bulk Regulations. The height, area and bulk regulations for uses in the "B-3" Extensive Commercial District

b. Internal Drives:

(1) There shall be parking to be indicated on the Final Development Plan.

c. Minimum Parking/Loading Space Requirements.

(1) There shall be a minimum of **40** parking spaces provided on the property.

(2) A cross parking easement shall be recorded to allow additional parking for the restaurant to meet regulations.

d. Road Improvements, Access and Sidewalks

Final Development shall include Lindbergh (Lin-Cor) Improvement Plan enhancements along the entire frontage.

e. Lighting Requirements.

Lighting of the property shall comply with the following standards and requirements:

(1) The light level for parking lot lighting shall be 0.5 fc minimum as indicated on **E1.1 attached.**

(2) All site lighting and exterior building lighting shall be directed down and inward.

f. Sign Requirements.

(1) **There shall be one new post sign as shown located on the 1 of 3 (Preliminary Site Development Plan) dated 9/16/16 attached.**

(2) **There shall be wall signage with a metal mural and drive-through arrow as shown on the Rendered Elevations A04.1 and A04.2 attached.**

(3) All other signage shall comply with the City of Florissant sign ordinance for commercial districts.

g. Landscaping and Fencing.

(1) Landscaping indicated on Landscape Plan for the restaurant **shall be as shown on the attached L1.0 dated 9/14/16.**

(2) Any modifications to the landscaping shall be reviewed and approved by the **Building Commissioner including a landscape plan for the shopping center subdivided parcel.**

h. Storm Water.

Storm Water and drainage facilities shall comply with the following standards and requirements:

(1) The Director of Public Works shall review the storm water plans to assure that storm water flow will have no adverse affect the neighboring properties.

(2) No building permits shall be issued until the storm water plan has been approved by the St. Louis Metropolitan Sewer District.

i. Miscellaneous Design Criteria.

(1) All applicable parking, circulation, sidewalks, and all other site design features shall comply with the Florissant City Code.

(2) All dumpsters and grease containers shall be contained within a trash enclosure with gates, compatible with existing building.

(3) All storm water and drainage facilities shall be constructed, and all landscaping shall be installed, prior to occupancy of the building, unless remitted by the Director of Public Works due to weather related factors.

(4) All mechanical equipment, electrical equipment, and communication equipment shall be screened in accordance with the Florissant Zoning Code.

(5) The exterior design of the buildings shall be constructed in accordance with the renderings as approved by the Florissant Planning and Zoning Commission and attached hereto.

(6) All other requirements of the Florissant Municipal Code and other ordinances of the city shall be complied with unless otherwise allowed by this ordinance.

7. FINAL SITE DEVELOPMENT PLAN

A final site development plan shall be submitted to the Building Commissioner to review for compliance with the applicable "B-5" Planned Commercial Development ordinance prior to recording. Any variations from the ordinance approved by the City Council and/or the conceptual plans attached to such ordinance shall be processed in accordance with the procedure established in the Florissant Zoning Code.

8. AMENDMENTS TO THE SITE AND EXTERIOR BUILDING PLANS:
Any changes to the approved plans attached hereto must be reviewed by the Building Commissioner. The Building Commissioner must make a determination as to the extent of the changes per the following procedure:

1. The property owner or designate representative shall submit in writing a request for an amendment to the approved plans. The building commissioner shall review the plans for consistency with the purpose and content of the proposal as originally or previously advertised for public hearing and shall make an advisory determination.
2. If the building commissioner determines that the requested amendment is not consistent in purpose and content with the nature of the purpose as originally proposed or previously advertised for the public hearing, then an amendment to the special use permit shall be required and a review and recommendation by the planning and zoning commission shall be required and a new public hearing shall be required before the City Council.
3. If the building commissioner determines that the proposed revisions are consistent with the purpose and content with the nature of the public hearing then a determination of non-necessity of a public hearing shall be made.
4. Determination of minor changes: If the building commissioner determines that an amendment to the special use permit is not required and that the changes to the plans are minor in nature the Building Commissioner may approve said changes.
5. Determination of major changes: If the Building Commissioner determines that an amendment to the B-5 is not required but the changes are major in nature, then the owner shall submit an application for review and approval by the Planning and Zoning commission.

9. VERIFICATION PRIOR TO OCCUPANCY PERMIT

a. Any new roadway improvements shall be completed prior to the issuance of any final occupancy permit.

b. Any new stormwater detention shall be completed prior to the issuance of any occupancy permit.

c. All fencing and/or landscaping intended as screening properties shall be completed prior to the issuance of any occupancy permit, unless remitted by the Director of Public Works due to weather related factors.

10. GENERAL DEVELOPMENT CONDITIONS.

a. Unless, and except to the extent, otherwise specifically provided herein, development shall be effected only in accordance with all ordinances of the City of Florissant.

b. The Department of Public Works shall enforce the conditions of this ordinance in accordance with the Final Site Development Plan approved by the Planning & Zoning Commission and all other ordinances of the City of Florissant.

9. **PROJECT COMPLETION.**

Construction shall start within 90 days of the issuance of building permits for the project and shall be developed in accordance of the approved final development plan within ~~18~~ months of start of construction.

ok 16 months.

(End of report and suggested motion)

Pylon

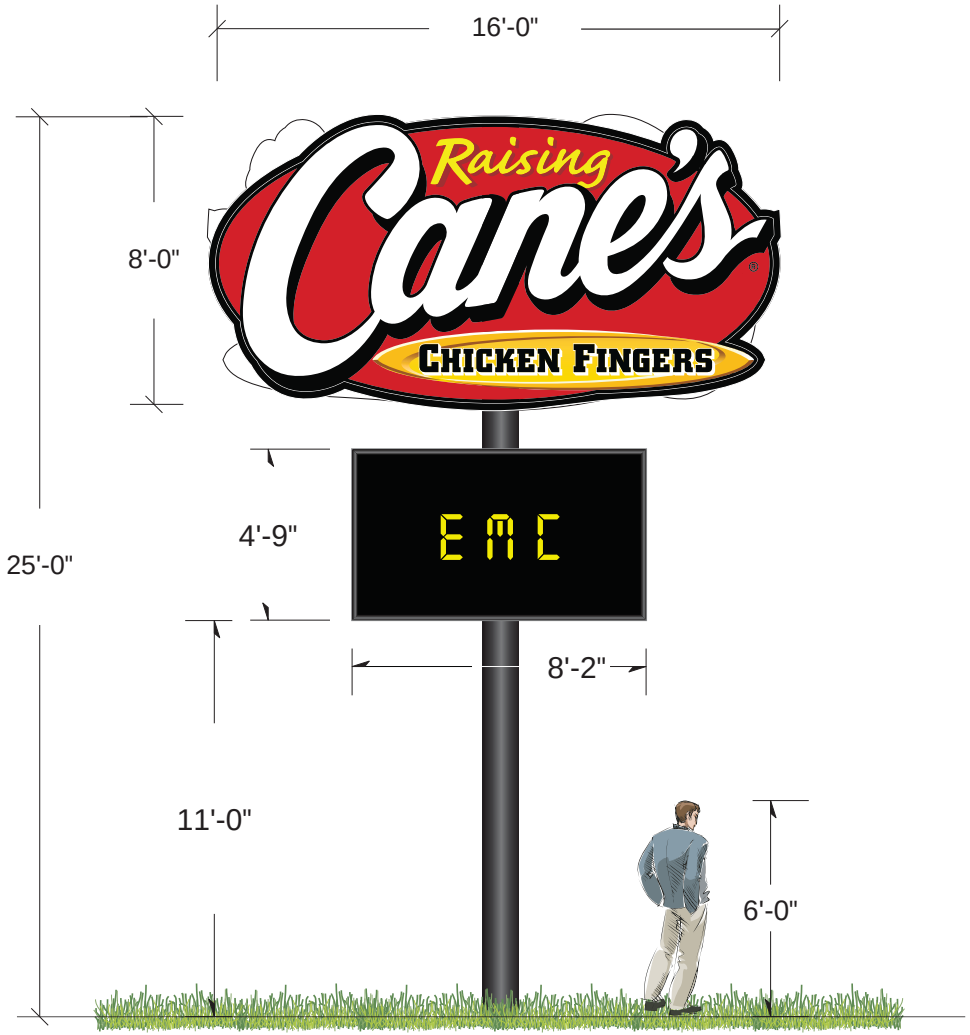

Location: Florissant MO	AGI Rep: G.W.	Drawn by: S. MCDOUGAL	
Survey ID: N/A	Project Title: Raising Cane's		
Site ID: RC0296	Scale: NTS		
Date: 11/18/2016	Date Revised:		

This document is the sole property of Architectural Graphics, Inc. ,and all design, manufacturing, reproduction, use and sale rights regarding the same are expressly forbidden. It is submitted under a confidential relationship, for a special purpose, and the recipient, by accepting this document assumes custody and agrees that this document will not be copied or reproduced in whole or in part, nor its contents revealed in any manner or to any person except for the purpose for which it was tendered, nor any special features peculiar to this design be incorporated in other projects.

YOUR IMAGE. OUR PRIORITY.
Architectural Graphics, Inc.
2655 International Pkwy., Virginia Beach, VA 23452
PHONE: (757) 427-1900 - Fax (757) 430-1297
www.AGISign.com

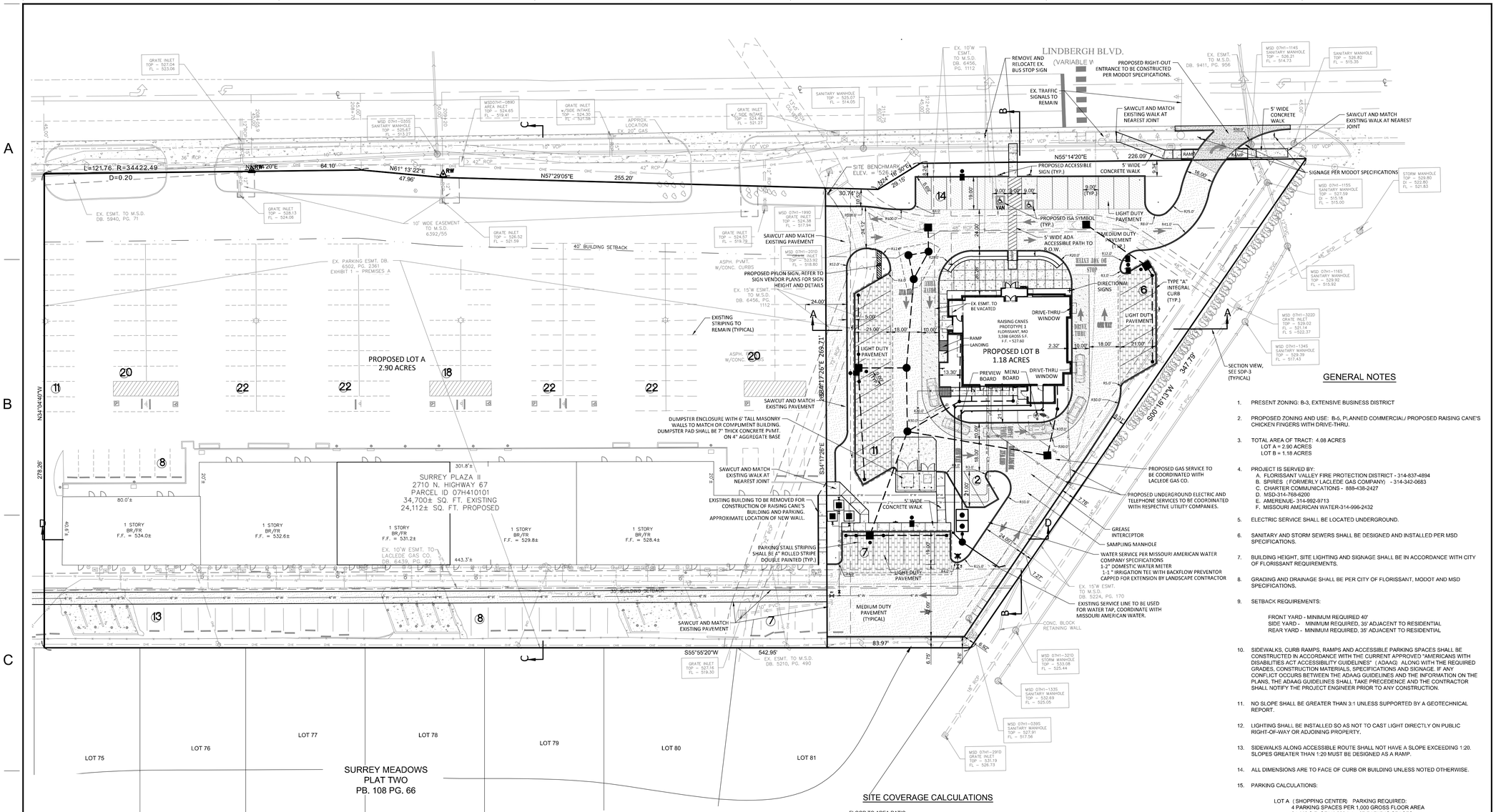

GENERAL NOTES

1. PRESENT ZONING: B-3, EXTENSIVE BUSINESS DISTRICT
2. PROPOSED ZONING AND USE: B-5, PLANNED COMMERCIAL/ PROPOSED RAISING CANE'S CHICKEN FINGERS WITH DRIVE-THRU.
3. TOTAL AREA OF TRACT: 4.08 ACRES
   LOT A = 2.90 ACRES
   LOT B = 1.18 ACRES
4. PROJECT IS SERVED BY:
   A. FLORISSANT VALLEY FIRE PROTECTION DISTRICT - 314-837-4894
   B. SPIRES （FORMERLY LACLEDE GAS COMPANY） - 314-342-0683
   C. CHARTER COMMUNICATIONS - 888-438-2427
   D. MSD-314-768-6200
   E. AMERENUE- 314-892-9713
   F. MISSOURI AMERICAN WATER-314-996-2432
5. ELECTRIC SERVICE SHALL BE LOCATED UNDERGROUND.
6. SANITARY AND STORM SEWERS SHALL BE DESIGNED AND INSTALLED PER MSD SPECIFICATIONS.
7. BUILDING HEIGHT, SITE LIGHTING AND SIGNAGE SHALL BE IN ACCORDANCE WITH CITY OF FLORISSANT REQUIREMENTS.
8. GRADING AND DRAINAGE SHALL BE PER CITY OF FLORISSANT, MODOT AND MSD SPECIFICATIONS.
9. SETBACK REQUIREMENTS:

   FRONT YARD - MINIMUM REQUIRED 40'
   SIDE YARD - MINIMUM REQUIRED, 35' ADJACENT TO RESIDENTIAL
   REAR YARD - MINIMUM REQUIRED, 35' ADJACENT TO RESIDENTIAL
10. SIDEWALKS, CURB RAMPS, RAMPS AND ACCESSIBLE PARKING SPACES SHALL BE CONSTRUCTED IN ACCORDANCE WITH THE CURRENT APPROVED "AMERICANS WITH DISABILITIES ACT ACCESSIBILITY GUIDELINES" （ADAAG） ALONG WITH THE REQUIRED GRADES, CONSTRUCTION MATERIALS, SPECIFICATIONS AND SIGNAGE. IF ANY CONFLICT OCCURS BETWEEN THE ADAAG GUIDELINES AND THE INFORMATION ON THE PLANS, THE ADAAG GUIDELINES SHALL TAKE PRECEDENCE AND THE CONTRACTOR SHALL NOTIFY THE PROJECT ENGINEER PRIOR TO ANY CONSTRUCTION.
11. NO SLOPE SHALL BE GREATER THAN 3:1 UNLESS SUPPORTED BY A GEOTECHNICAL REPORT.
12. LIGHTING SHALL BE INSTALLED SO AS NOT TO CAST LIGHT DIRECTLY ON PUBLIC RIGHT-OF-WAY OR ADJOINING PROPERTY.
13. SIDEWALKS ALONG ACCESSIBLE ROUTE SHALL NOT HAVE A SLOPE EXCEEDING 1:20. SLOPES GREATER THAN 1:20 MUST BE DESIGNED AS A RAMP.
14. ALL DIMENSIONS ARE TO FACE OF CURB OR BUILDING UNLESS NOTED OTHERWISE.
15. PARKING CALCULATIONS:

   LOT A （SHOPPING CENTER） PARKING REQUIRED:
   4 PARKING SPACES PER 1,000 GROSS FLOOR AREA
   24,112 S.F. GFA/1,000 * 4 = 97 PARKING SPACES
   PARKING PROVIDED:
   PARKING PROVIDED = 193 PARKING SPACES
   ACCESSIBLE SPACES REQUIRED:
   SECTION 208.2 OF 2010 ADA STANDARDS FOR ACCESSIBLE DESIGN REQUIRES 6 ACCESSIBLE SPACES FOR 151 TO 200 PARKING SPACES
   ACCESSIBLE PARKING PROVIDED:
   10 ACCESSIBLE SPACES

   LOT B （RAISING CANE'S） PARKING REQUIRED:
   1 PARKING SPACE PER 2 SEATS
   92 SEATS / 2 = 46 * 1 PARKING SPACE = 46 PARKING SPACES
   2 PARKING SPACES PER 3 EMPLOYEES MAXIMUM SHIFT
   15 EMPLOYEES/3 * 2 PARKING SPACES = 10 PARKING SPACES
   TOTAL PARKING REQUIRED = 56 PARKING SPACES
   PARKING PROVIDED:
   PARKING PROVIDED = 40 PARKING SPACES
   ACCESSIBLE SPACES REQUIRED:
   SECTION 208.2 OF 2010 ADA STANDARDS FOR ACCESSIBLE DESIGN REQUIRES 2 ACCESSIBLE SPACES FOR 2 TO 50 PARKING SPACES
   ACCESSIBLE SPACES PROVIDED:
   2 ACCESSIBLE SPACES
16. PER FEMA NO. 29189C0066K, PANEL 66 OF 445, ST. LOUIS COUNTY, MISSOURI AND INCORPORATED AREAS, DATED FEBRUARY 4, 2015, THIS PROPERTY IS ZONE X （UNSHADED） , AREAS DETERMINED TO BE OUTSIDE 0.2% ANNUAL CHANCE FLOODPLAIN.
17. PROPOSED BUILDING HEIGHT = 24'±, MAXIMUM BUILDING HEIGHT 45'.
18. FOR CLARITY, EXISTING ONSITE STRUCTURES HAVE BEEN REMOVED. ONSITE STRUCTURES ARE TO BE DEMOLISHED UNLESS NOTED ON THE PLANS.
19. ALL ROAD CONSTRUCTION SHALL TAKE PLACE BETWEEN THE HOURS OF 7PM AND 5 AM UNLESS OTHERWISE TIMES ARE APPROVED BY THE CITY OF FLORISSANT.

SITE COVERAGE CALCULATIONS

FLOOR TO AREA RATIO
LOT A - 23,906/126,504 = 0.19 FAR
LOT B - 3,598/ 51,343 = 0.07 FAR

Lot A - 2.17 Acres of Pavement and 0.55 Acres of Building
Lot B - 0.77 Acres of Pavement and 0.24 Acres of Building

Existing Green Space
Lot A - 0.18 Acres
Lot B - 0.17 Acres

Existing percent of Impervious Area Coverage
Lot A = 93.79%
Lot B = 85.59%

Proposed Impervious Area Parking Lot and Building
Lot A - 2.16 Acres of Parking Area and 0.55 Acres of Building
Lot B - 0.77 Acres of Parking Area and 0.08 Acres of Building

Proposed Green Space
Lot A = 0.19 Acres
Lot B = 0.33 Acres

Proposed percent of Impervious Area Coverage
Lot A = 93.45%
Lot B = 72.03%

This site plan proposed a decrease of 0.17 Acres in Impervious Area Coverage

DIFFERENTIAL RUNOFF CALCULATIONS (15 YR./20 MIN. STORM)

Existing Site:
Lot A = 2.17 AC x 3.54 CFS + 0.55 AC x 4.2 CFS = 0.18 AC x 1.70 CFS = 10.30 CFS
Lot B = 0.77 AC. x 3.54 CFS + 0.24 AC x 4.2 CFS = 0.17 AC x 1.70 CFS = 4.02 CFS
Total 14.32 CFS

Proposed Site:
Lot A = 2.16 AC x 3.54 CFS = 0.55 AC x 4.2 CFS = 0.19 AC x 1.70 CFS = 10.28 CFS
Lot B = 0.77 AC x 3.54 CFS = 0.08 AC x 4.2 CFS = 0.33 AC x 1.70 CFS = 3.62 CFS
Total 13.90 CFS

Differential Runoff = 13.90 CFS (Proposed) - 14.32 CFS (Existing) = -0.42 CFS

EXISTING LEGEND	
	FOUND IRON PIPE
	SET IRON PIPE (2012007849)
	FOUND STONE MONUMENT
	FIRE HYDRANT
	WATER VALVE
	WATER METER VAULT
	IRRIGATION CONTROL VALVE
	GAS VALVE
	GAS METER
	LIGHT STANDARD
	CLEAN OUT
	SANITARY SEWER MANHOLE
	STORM SEWER MANHOLE
	STORM SEWER INLET
	PIPE BOLLARD
	SIGN
	BUSH
	TREE
	TRAFFIC SIGNAL BOX
	MONITORING WELL
	TEST HOLE
	PEDESTRIAN SIGNAL
	ELECTRIC METER
	STORM CURB INLET
	STORM DOUBLE CURB INLET
	AIR CONDITIONER
	DOWN SPOUT
B.O.C.	BACK OF CURB

PROPOSED LEGEND	
	UTILITY POLE
	FIRE HYDRANT
	WATER VALVE
	WATER METER VAULT
	GAS METER
	LIGHT STANDARD
	CLEAN OUT
	MONITORING WELL
	SANITARY SEWER MANHOLE
	STORM SEWER MANHOLE
	GRATE INLET
	DOUBLE CURB INLET
	PIPE BOLLARD
	ADA ACCESSIBLE SIGN
	ELECTRIC METER
—UgE—	UNDERGROUND ELECTRIC
—UgT—	UNDERGROUND TELEPHONE
—1.5"W—	1.5" WATER MAIN
—6"W—	6" WATER MAIN
—8"W—	8" WATER MAIN
—G—	GAS LINE
—502—	CONTOUR LINE
	TRANSFORMER
	PREVIEW BOARD
	MENU BOARD
	ISA SYMBOL

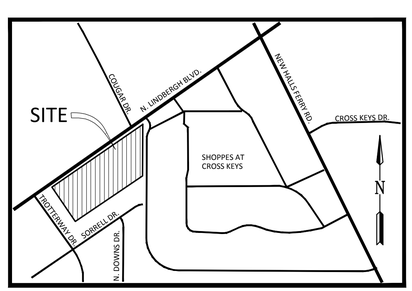

LOCATION MAP
N.T.S.

1" = 30'
30 15 0 30 60
SCALE IN FEET

MSD BASE MAP #07H
MSD P#

RAISING CANE'S
2800 N. HIGHWAY 67
FLORISSANT, MO 63033
PROTOTYPE 1 STORE #296

DEVELOPER/APPLICANT:
Raising Cane's Restaurants, L.L.C.
Attn: LuAron McCormack
6800 Bishop Road
Plano, TX 75024
Tele: 972-769-3364

OWNER:
Tom Lane
Bridle Development Corporation
Suite 100, 727 Craig Road
St. Louis, MO 63141
Tele: 314-567-9944

CONSULTANT:
PREMIER CIVIL ENGINEERING
308 TCW Court
Lake Saint Louis, MO 63367
Phone: (314) 925-7444 Fax: (314) 925-7457
Missouri Certificate of Authority # E-2011000031
Missouri Certificate of Authority # LS-2012007849

ARCHITECT OF RECORD:
CSRS
IMAGINE SHAPE DELIVER
6767 Perkins Road Suite 200 Baton Rouge, LA 70808
Telephone: 225 769-0546 Fax: 225 767-0060
www.csrsonline.com
Attn: Yanez Moree

ENGINEERS AUTHENTICATION
The responsibility for professional engineering liability on this project is hereby limited to the set of plans authenticated by the seal, signature, and date hereunder attached. Responsibility is disclaimed for all other engineering plans involved in this project and specifically excludes revisions after this date unless reauthenticated.

STEVE MARION P.E.
ENGINEER
PE2008007195

REVISIONS:
11-18-16 REVISED PYLON SIGN NOTATION

DRAWING BY: D.STOSZ
DATE: 11-3-2016
JOB NUMBER: 164601

TITLE:
PRELIMINARY SITE DEVELOPMENT PLAN

SHEET NUMBER:
1 OF 3

COMMENTS:
RELEASED FOR CONSTRUCTION

\\Vault.pcivault\CIVIL 3D PROJECTS\2016\164601 RAISING CANE'S FLORISSANT MO\COMMERCIAL\SITE PLAN\SITE PLAN.dwg 11/21/2016 9:41 AM PCE PLOT STYLE.CTB

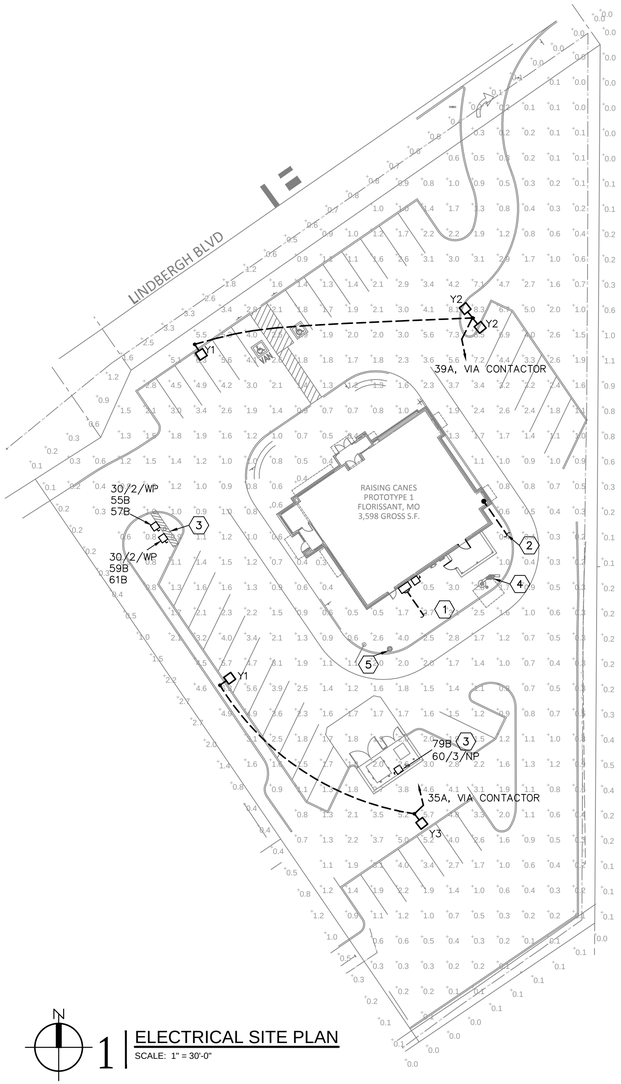

N

1 | ELECTRICAL SITE PLAN

SCALE: 1" = 30'-0"

2 | ELECTRICAL SYMBOL SCHEDULE

	FLUORESCENT STRIP LIGHTING FIXTURE.
,	WALL MOUNTED LIGHTING FIXTURE
,	LIGHTING FIXTURE
,	POLE MOUNTED LIGHTING FIXTURE. RE: 6E5.
	PENDANT MOUNTED LIGHT FIXTURE
1A A,a	LIGHTING FIXTURE TYPE A: CONNECT TO CIRCUIT NO. 1 IN PANEL A. CONNECT TO SWITCH INDICATED BY LETTER "a". WHERE NO LETTER IS SHOWN, CONNECT TO SWITCH(ES) (SINGLE POLE OR THREE-WAY) IN ROOM.
,	EXIT LIGHT: SHADED AREA DENOTES FACE. WALL MOUNT WHEN SHOWN WITH BRACKET, CEILING MOUNT OTHERWISE. COORDINATE WITH DOOR SWINGS. ARROW(S) AS NOTED.
	CEILING FAN
	WALL MOUNTED EMERGENCY BATTERY BACKED UP LIGHTING FIXTURE.
LC	LIGHTING CONTACTOR
S_F	FAN CONTROL SWITCH
S	SINGLE POLE TOGGLE SWITCH
	DUPLEX RECEPTACLE
	DOUBLE DUPLEX RECEPTACLE
GF	DUPLEX RECEPTACLE WITH INTEGRAL GROUND FAULT PROTECTION
IG	DUPLEX RECEPTACLE WITH ISOLATED GROUND
	SPECIAL RECEPTACLE, SEE PLANS.
J	JUNCTION/PULL BOX
C	TELECOMMUNICATIONS OUTLET. UNLESS NOTED OTHERWISE, ROUTE TWO 3/4" CONDUITS CONCEALED TO ACCESSIBLE CEILING AND/OR ATTIC SPACE AND TERMINATE WITH A BUSHING. CONDUIT SHALL BE BENT/INSTALLED SUCH THAT 0'-3" MINIMUM OF CONDUIT IS AT 45 DEGREES FROM HORIZONTAL WITH CEILING PLANE. PROVIDE PULL STRING IN ALL CONDUIT ROUTES 2' OR GREATER.
NL	NIGHT LIGHT. FIXTURE CIRCUITED TO AN UNSWITCHED CONDUCTOR OF THE CIRCUIT INDICATED.
48" AFF	MOUNT 48" ABOVE FINISHED FLOOR TO CENTER LINE.
OS	PROVIDE SENSOR SWITCH/CMR-PDT-9 OCCUPANCY SENSOR. CONNECT THE LIGHTS IN THE ROOM WITH THE OCCUPANCY SENSOR TO BE CONNECTED TO IT.
1-1/2" EC	EMPTY CONDUIT WITH PULL WIRE. EMPTY CONDUIT RUN TO ABOVE CEILING SHALL TERMINATE IN A BUSHING AND BE BENT/INSTALLED SUCH THAT 0'-6" MINIMUM OF CONDUIT IS PARALLEL WITH CEILING PLANE.
WP	WEATHERPROOF, NEMA 3R OR AS NOTED ON PLANS.
RE: 1E2	REFER TO DETAIL 1, SHEET E2.
CLG	RECEPTACLE MOUNTED IN LAY-IN CEILING. COORDINATE DEVICE AND PLATE COLOR WITH ARCHITECT.
B	BUZZER
PB	PUSHBUTTON ASSEMBLY
A	NEW PANEL DESIGNATED "A" FLUSH MOUNTED PANEL. LINE DENOTES PANEL DOOR.
	CONDUIT RUN EXPOSED
	CONDUIT RUN CONCEALED UNDER FLOOR OR UNDERGROUND
60/3/NP	DISCONNECT SWITCH WITH EQUIPMENT GROUND LUG (SIZE/POLE/FUSE SIZE): 60A, 3 POLE SWITCH, FUSED AS PER NAMEPLATE OF EQUIPMENT SERVED BY SWITCH.
60/3	DISCONNECT SWITCH WITH EQUIPMENT GROUND LUG (SIZE/POLE): 60A, 3 POLE, NON-FUSIBLE SWITCH.
AHU-1	MECHANICAL EQUIPMENT CONNECTED BY ELECTRICAL. RE: MECHANICAL EQUIPMENT SCHEDULES FOR DESCRIPTION.
1	REFERENCE TO ELECTRICAL KEYNOTE NUMBER 1.
D	FIRE ALARM SMOKE DETECTOR IN SUPPLY AND/OR RETURN AIR DUCT.
S	FIRE ALARM SMOKE DETECTOR.
FAP	FIRE ALARM PANEL
RAP	FIRE ALARM REMOTE ANNUNCIATOR PANEL. PROVIDE 3/4"C TO ASSOCIATED FIRE ALARM PANEL.
FS	SPRINKLER SYSTEM FLOW SWITCH, CONNECT TO FIRE ALARM SYSTEM.
TS	SPRINKLER SYSTEM TAMPER SWITCH, CONNECT TO FIRE ALARM SYSTEM.
S_P	TOGGLE SWITCH WITH PILOT LIGHT. SWITCH SHALL BE 120/277V, 20A RATED. PILOT LIGHT SHALL BE ENERGIZED IN ON POSITION ONLY.
LV	PROVIDE SENSOR SWITCH/CM-9 LOW VOLTAGE OCCUPANCY SENSOR.

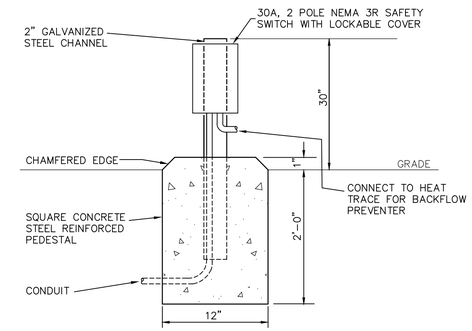

5 | EXTERIOR SWITCH SUPPORT DETAIL

NOT TO SCALE

6 | SITE LIGHTING PHOTOMETRIC DATA

ALL PHOTOMETRIC DATA IS TAKEN SHOWING HORIZONTAL FOOT CANDLES AT 3FT.

- MAX POLE HEIGHT FOR SITE: 30 FT
- AVERAGE FOOT CANDLES FOR SITE: 1.6FC
- MAXIMUM FOOT CANDLES FOR SITE: 8.5FC
- MAXIMUM FOOT CANDLES AT PERIMETER: 3.3FC

3 | KEYNOTES

1. UTILITY METER AND SERVICE DISCONNECT. COORDINATE REQUIREMENTS WITH UTILITY PROVIDER. TIE INTO UNDERGROUND SERVICE CONDUIT WITH RIGID STEEL CONDUIT AND TURN UP ON OUTSIDE OF BUILDING INTO METER BASE (BY UTILITY PROVIDER). SEE CIVIL UTILITY PLAN FOR SITE TIE-IN LOCATIONS. EXTEND ANY SPARE CONDUIT TO BUILDING EXTERIOR, CAP AND MARK. SEE RISER DIAGRAM ON SHEET E4 FOR CONTINUATION.
2. UNDERGROUND TELEPHONE AND INTERNET SERVICE CONDUIT. COORDINATE WITH UTILITY PROVIDER. TIE INTO UNDERGROUND 4" CONDUIT FOR PHONE AND 3" CONDUIT FOR INTERNET AND EXTEND INTO BUILDING AS INDICATED ON SHEET E2. SEE CIVIL UTILITY PLAN FOR SITE TIE-IN LOCATION.
3. PYLON SIGN. PROVIDE (2) 2"C TO SIGN, ONE FOR ALL SIGN POWER CONDUCTORS AND THE OTHER FOR DATA. DISCONNECT SWITCHES SHALL SWITCH THE NEUTRAL CONDUCTOR. CIRCUITS CONNECTED TO THE SAME DISCONNECT SWITCH SHALL SHARE THEIR NEUTRAL CONDUCTOR
4. ORDER BOARD, SPEAKER PEDESTAL AND CANOPY. RE: 5E3.3 FOR CONTROL/POWER.
5. PRE-MENU BOARD. RE: 5E3.3 FOR CONTROL/POWER.
6. FUSED DISCONNECT FOR COMPACTOR. COORDINATE SWITCH AND FUSE SIZES WITH EQUIPMENT MANUFACTURER PRIOR TO ORDERING. MAKE CONNECTION TO COMPACTOR AS REQUIRED.
7. 3/4" EC FROM PAY WINDOW. RE: 1E2, KEYNOTE 31.
8. 3/4" EC TO LOOP DETECTOR. RE: 1E6.

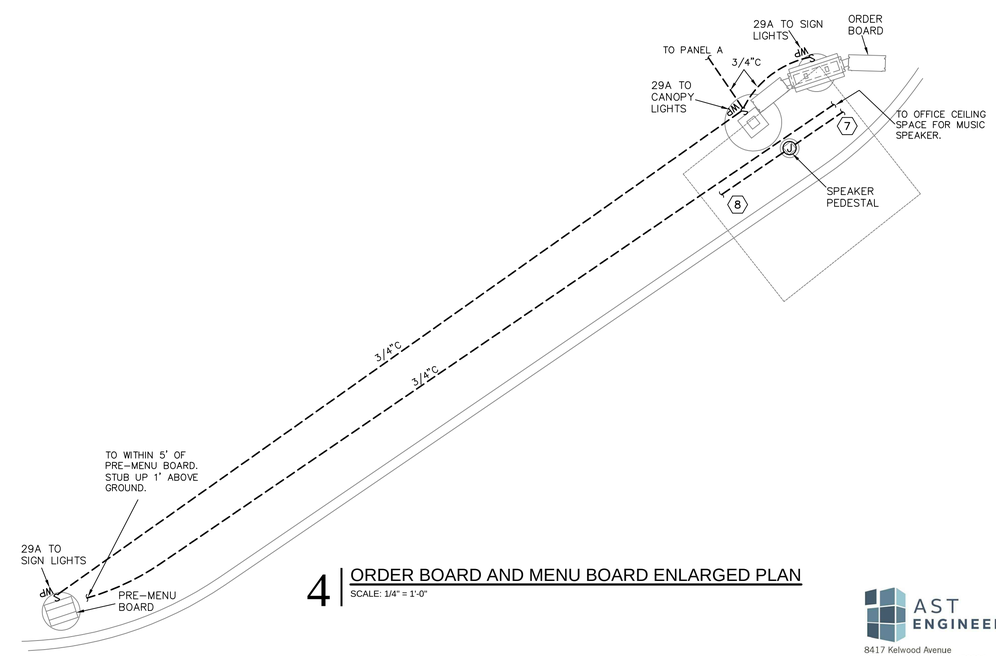

4 | ORDER BOARD AND MENU BOARD ENLARGED PLAN

SCALE: 1/4" = 1'-0"

AST ENGINEERS
8417 Kelwood Avenue
Baton Rouge, Louisiana 70806
(p) 225.926.5600 | (f) 225.926.5620
www.astengineers.us
MISSOURI REGISTRATION NUMBER E-2015003024

Raising Cane's Chicken Fingers
Restaurant Support Office
6800 Bishop Road, Plano, TX 75024
Tele: 972-769-3100 Fax: 972-769-3101

Store:

Raising Cane's
Lindbergh Blvd.
Florissant, MO 63033
Prototype 1
Store #296

Architect & Project Manager:

CSRS
IMAGINE SHAPE DELIVER
6767 Perkins Road Suite 200 Baton Rouge, LA 70808
Telephone: 225 769-0546 Fax: 225 767-0060
www.csrsonline.com

Set Control Information:	Archetype v.16-0719
Setup / Update Date:	YY-MMDD | YY-MMDD
CSRS Project Manager:	MAR

Professional of Record:

Sheet Versions / Revisions:

#	Date:	Description:

Sheet Title:

ELECTRICAL SITE PLAN

Project Number:

Drawn By: VMT

Sheet Number:

E1.1

P:\Projects_Active\RAISING CANES FLORISSANT MO 3-296_JE-8320\Drawings\8320E11.dwg, 08 E1.1, 9/7/2016 3:35:33 PM, vthomas

01 | FRONT ELEVATION
1/4"= 1'-0"
01:A4.1

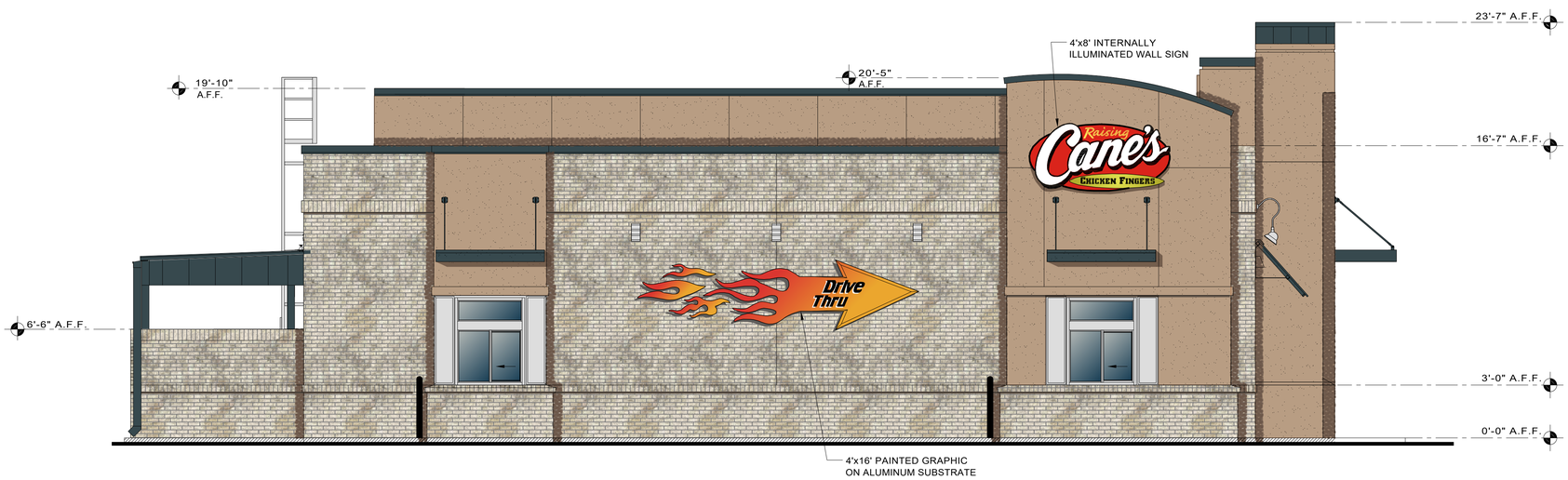

02 | DRIVE-THRU ELEVATION
1/4"= 1'-0"
02:A4.1

EXTERIOR MATERIALS

- BRICK MASONRY
  BORAL ALAMO MODULAR
- STUCCO WITH ACRYLIC FINISH
  DRYVIT #383 HONEY TWIST
- CLEAR ANODIZED ALUMINUM STOREFRONT
  KAWNEER TRIFAB 451 II
- GALVANIZED STEEL SHEET W/ KYNAR FINISH
  MATTE BLACK
- STAINLESS STEEL COVER PANEL

Raising Cane's Chicken Fingers
Restaurant Support Office
6800 Bishop Road, Plano, TX 75024
Tele: 972-769-3100 Fax: 972-769-3101

Store:
Raising Cane's
____ Lindbergh Blvd.
Florissant, MO 63033
Prototype 1
Store #296

Architect & Project Manager:
CSRS
IMAGINE SHAPE DELIVER
6767 Perkins Road Suite 200 Baton Rouge, LA 70808
Telephone: 225 769-0546 Fax: 225 767-0060
www.csrsonline.com

Set Control Information:	Archetype v.16-0719
Setup / Update Date:	YY-MMDD | YY-MMDD
CSRS Project Manager:	MAR

Professional of Record: -

Sheet Versions / Revisions:

#	Date:	Description:

Sheet Title:
EXTERIOR ELEVATIONS

Project Number: -
Drawn By: -
Sheet Number:
A04.1

P:\2160000\RC 296 Florissant, MO\04 Drawings\03 Architectural\Renderings\ Building Renderings.dwg Oct 07, 2016 - 9:05am

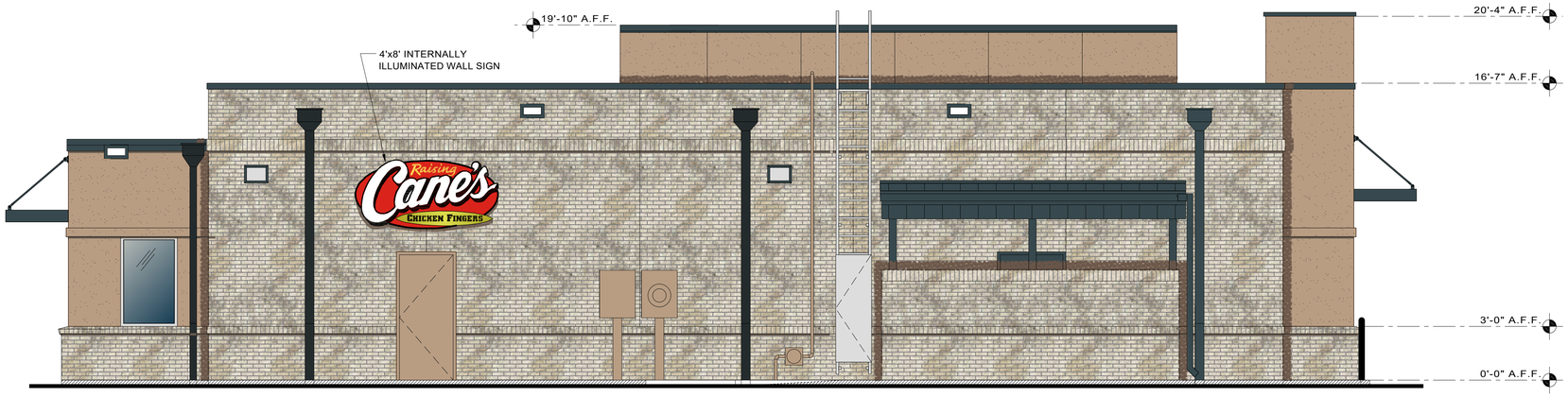

01 | REAR ELEVATION
1/4"= 1'-0"
01:A4.2

EXTERIOR MATERIALS

- BRICK MASONRY
  BORAL ALAMO MODULAR
- STUCCO WITH ACRYLIC FINISH
  DRYVIT #383 HONEY TWIST
- CLEAR ANODIZED ALUMINUM
  STOREFRONT
  KAWNEER TRIFAB 451 II
- GALVANIZED STEEL SHEET W/
  KYNAR FINISH
  MATTE BLACK
- STAINLESS STEEL COVER PANEL

02 | SIDE ENTRY ELEVATION
1/4"= 1'-0"
02:A4.2

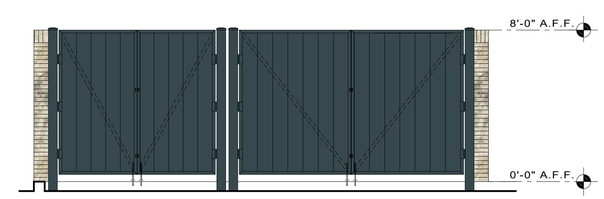

03 | DUMPSTER ENCLOSURE ELEVATION
1/4"= 1'-0"
03:A4.2

Restaurant Support Office
6800 Bishop Road, Plano, TX 7502
Tele: 972-769-3100 Fax: 972-769

Store:
Raising Cane's
Lindbergh Blvd.
Florissant, MO 63033
Prototype 1
Store #296

Architect & Project Manager:

CSRS
IMAGINE SHAPE DELIVER
6767 Perkins Road Suite 200 Baton Rouge, LA 70
Telephone: 225 769-0546 Fax: 225 767-006
www.csrsonline.com

Set Control Information: Prototype v.16-0719
Setup / Update Date: YYYY-MMDD
CSRS Project Manager: MAR

Professional of Record: -

Sheet Versions / Revisions:

#	Date:	Description:

Sheet Title:
EXTERIOR ELEVATIONS

Project Number: -
Drawn By: -
Sheet Number:
A04.2

P:\216000\RC 296 Florissant, MO\04 Drawings\03 Architectural\Renderings\ Building Renderings.dwg Oct 07, 2016 - 7:57am

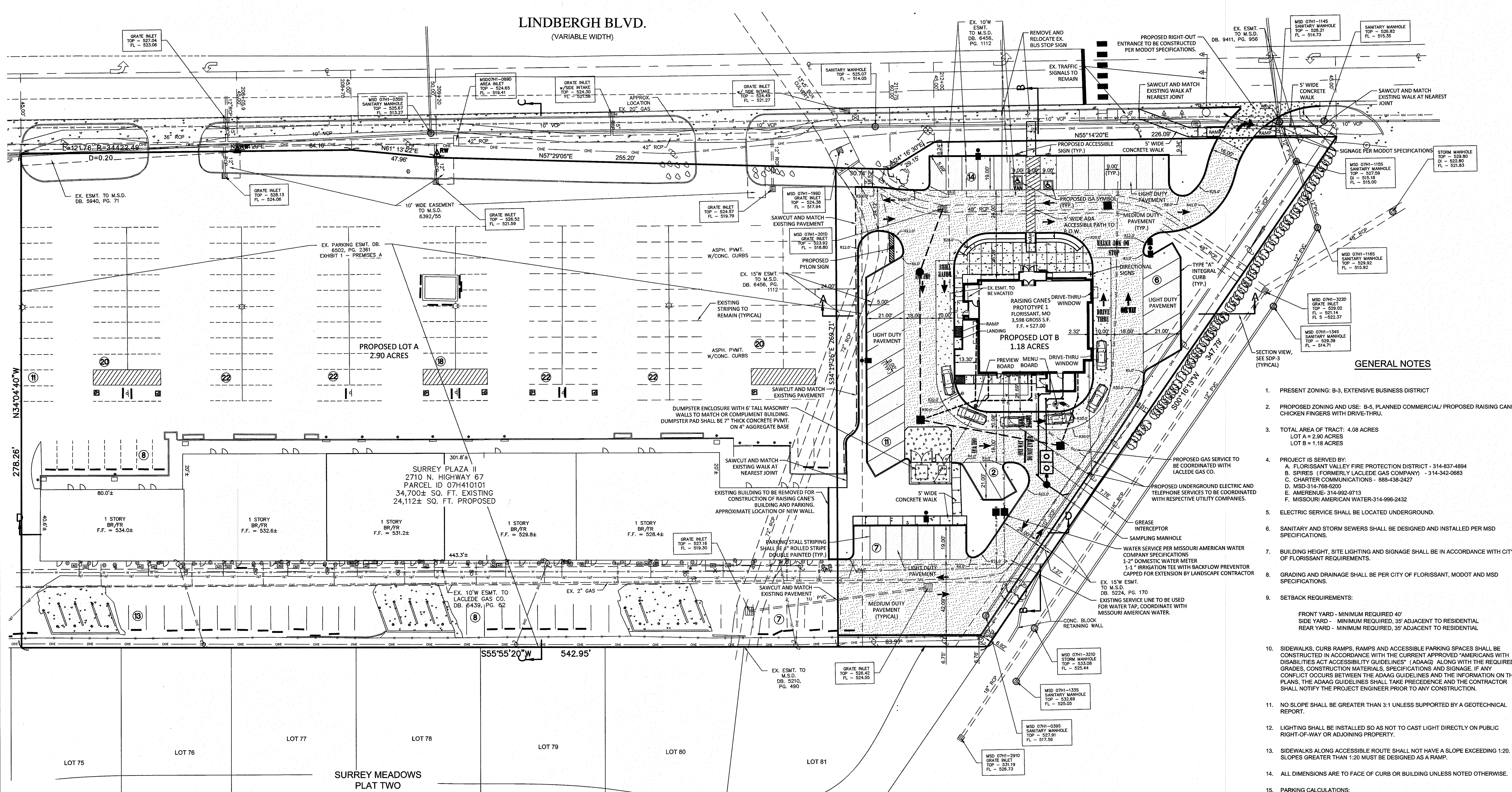

EXISTING LEGEND

Symbol	Description
	FOUND IRON PIPE
	SET IRON PIPE (2012007849)
	FOUND STONE MONUMENT
	FIRE HYDRANT
	WATER VALVE
	WATER METER VAULT
ICV	IRRIGATION CONTROL VALVE
	GAS VALVE
	GAS METER
	LIGHT STANDARD
	CLEAN OUT
	SANITARY SEWER MANHOLE
	STORM SEWER MANHOLE
	STORM SEWER INLET
B	PIPE BOLLARD
	SIGN
	BUSH
	TREE
TSB	TRAFFIC SIGNAL BOX
	MONITORING WELL
	TEST HOLE
PS	PEDESTRIAN SIGNAL
	ELECTRIC METER
	STORM CURB INLET
	STORM DOUBLE CURB INLET
AC	AIR CONDITIONER
DS	DOWN SPOUT
B.O.C.	BACK OF CURB

PROPOSED LEGEND

Symbol	Description
	UTILITY POLE
	FIRE HYDRANT
	WATER VALVE
	WATER METER VAULT
	GAS METER
	LIGHT STANDARD
	CLEAN OUT
	MONITORING WELL
	SANITARY SEWER MANHOLE
	STORM SEWER MANHOLE
	GRATE INLET
	DOUBLE CURB INLET
	PIPE BOLLARD
	ADA ACCESSIBLE SIGN
	ELECTRIC METER
—UgE—	UNDERGROUND ELECTRIC
—UgT—	UNDERGROUND TELEPHONE
—1.5"W—	1.5" WATER MAIN
—6"W—	6" WATER MAIN
—8"W—	8" WATER MAIN
—G—	GAS LINE
—507—	CONTOUR LINE
T	TRANSFORMER
	PREVIEW BOARD
	MENU BOARD
	ISA SYMBOL

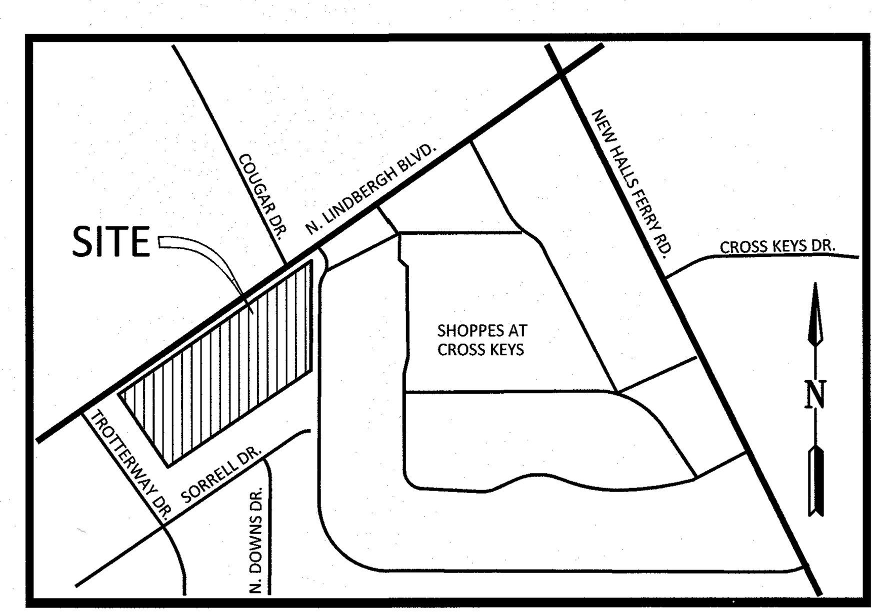

LOCATION MAP
N.T.S.

SITE COVERAGE CALCULATIONS

FLOOR TO AREA RATIO
LOT A - 23,906/126,504 = 0.19 FAR
LOT B - 3,598/ 51,343 = 0.07 FAR

Existing Impervious Area Parking Lot and Building
Lot A - 2.17 Acres of Pavement and 0.55 Acres of Building
Lot B - 0.77 Acres of Pavement and 0.24 Acres of Building

Existing Green Space
Lot A - 0.18 Acres
Lot B - 0.17 Acres

Existing percent of Impervious Area Coverage
Lot A = 93.79%
Lot B = 85.59%

Proposed Impervious Area Parking Lot and Building
Lot A - 2.16 Acres of Parking Area and 0.55 Acres of Building
Lot B - 0.77 Acres of Parking Area and 0.08 Acres of Building

Proposed Green Space
Lot A = 0.19 Acres
Lot B = 0.33 Acres

Proposed percent of Impervious Area Coverage
Lot A = 93.45%
Lot B = 72.03%

This site plan proposed a decrease of 0.17 Acres in Impervious Area Coverage

DIFFERENTIAL RUNOFF CALCULATIONS (15 YR./20 MIN. STORM)

Existing Site:
Lot A = 2.17 AC x 3.54 CFS + 0.55 AC x 4.2 CFS + 0.18 AC x 1.70 CFS = 10.30 CFS
Lot B = 0.77 AC. x 3.54 CFS + 0.24 AC x 4.2 CFS + 0.17 AC x 1.70 CFS = 4.02 CFS
Total 14.32 CFS

Proposed Site:
Lot A = 2.16 AC x 3.54 CFS + 0.55 AC x 4.2 CFS + 0.19 AC x 1.70 CFS = 10.28 CFS
Lot B = 0.77 AC x 3.54 CFS + 0.08 AC x 4.2 CFS + 0.33 AC x 1.70 CFS = 3.62 CFS
Total 13.90 CFS

Differential Runoff = 13.90 CFS (Proposed) - 14.32 CFS (Existing) = -0.42 CFS

1" = 30'
30 15 0 30 60
SCALE IN FEET

GENERAL NOTES

1. PRESENT ZONING: B-3, EXTENSIVE BUSINESS DISTRICT
2. PROPOSED ZONING AND USE: B-5, PLANNED COMMERCIAL/ PROPOSED RAISING CANE'S CHICKEN FINGERS WITH DRIVE-THRU.
3. TOTAL AREA OF TRACT: 4.08 ACRES
   LOT A = 2.90 ACRES
   LOT B = 1.18 ACRES
4. PROJECT IS SERVED BY:
   A. FLORISSANT VALLEY FIRE PROTECTION DISTRICT - 314-837-4894
   B. SPIRES (FORMERLY LACLEDE GAS COMPANY) - 314-342-0683
   C. CHARTER COMMUNICATIONS - 888-438-2427
   D. MSD-314-768-6200
   E. AMERENUE- 314-992-9713
   F. MISSOURI AMERICAN WATER-314-996-2432
5. ELECTRIC SERVICE SHALL BE LOCATED UNDERGROUND.
6. SANITARY AND STORM SEWERS SHALL BE DESIGNED AND INSTALLED PER MSD SPECIFICATIONS.
7. BUILDING HEIGHT, SITE LIGHTING AND SIGNAGE SHALL BE IN ACCORDANCE WITH CITY OF FLORISSANT REQUIREMENTS.
8. GRADING AND DRAINAGE SHALL BE PER CITY OF FLORISSANT, MODOT AND MSD SPECIFICATIONS.
9. SETBACK REQUIREMENTS:
   FRONT YARD - MINIMUM REQUIRED 40'
   SIDE YARD - MINIMUM REQUIRED, 35' ADJACENT TO RESIDENTIAL
   REAR YARD - MINIMUM REQUIRED, 35' ADJACENT TO RESIDENTIAL
10. SIDEWALKS, CURB RAMPS, RAMPS AND ACCESSIBLE PARKING SPACES SHALL BE CONSTRUCTED IN ACCORDANCE WITH THE CURRENT APPROVED "AMERICANS WITH DISABILITIES ACT ACCESSIBILITY GUIDELINES" (ADAAG) ALONG WITH THE REQUIRED GRADES, CONSTRUCTION MATERIALS, SPECIFICATIONS AND SIGNAGE. IF ANY CONFLICT OCCURS BETWEEN THE ADAAG GUIDELINES AND THE INFORMATION ON THE PLANS, THE ADAAG GUIDELINES SHALL TAKE PRECEDENCE AND THE CONTRACTOR SHALL NOTIFY THE PROJECT ENGINEER PRIOR TO ANY CONSTRUCTION.
11. NO SLOPE SHALL BE GREATER THAN 3:1 UNLESS SUPPORTED BY A GEOTECHNICAL REPORT.
12. LIGHTING SHALL BE INSTALLED SO AS NOT TO CAST LIGHT DIRECTLY ON PUBLIC RIGHT-OF-WAY OR ADJOINING PROPERTY.
13. SIDEWALKS ALONG ACCESSIBLE ROUTE SHALL NOT HAVE A SLOPE EXCEEDING 1:20. SLOPES GREATER THAN 1:20 MUST BE DESIGNED AS A RAMP.
14. ALL DIMENSIONS ARE TO FACE OF CURB OR BUILDING UNLESS NOTED OTHERWISE.
15. PARKING CALCULATIONS:

    LOT A (SHOPPING CENTER) PARKING REQUIRED:
    4 PARKING SPACES PER 1,000 GROSS FLOOR AREA
    24,112 S.F. GFA/1,000 * 4 = 97 PARKING SPACES
    PARKING PROVIDED:
    PARKING PROVIDED = 193 PARKING SPACES
    ACCESSIBLE SPACES REQUIRED:
    SECTION 208.2 OF 2010 ADA STANDARDS FOR ACCESSIBLE DESIGN REQUIRES 6 ACCESSIBLE SPACES FOR 151 TO 200 PARKING SPACES
    ACCESSIBLE PARKING PROVIDED:
    10 ACCESSIBLE SPACES

    LOT B (RAISING CANE'S) PARKING REQUIRED:
    1 PARKING SPACE PER 2 SEATS
    92 SEATS / 2 = 46 * 1 PARKING SPACE = 46 PARKING SPACES
    2 PARKING SPACES PER 3 EMPLOYEES MAXIMUM SHIFT
    15 EMPLOYEES/3 * 2 PARKING SPACES = 10 PARKING SPACES
    TOTAL PARKING REQUIRED = 56 PARKING SPACES
    PARKING PROVIDED:
    PARKING PROVIDED = 40 PARKING SPACES
    ACCESSIBLE SPACES REQUIRED:
    SECTION 208.2 OF 2010 ADA STANDARDS FOR ACCESSIBLE DESIGN REQUIRES 2 ACCESSIBLE SPACES FOR 2 TO 50 PARKING SPACES
    ACCESSIBLE SPACES PROVIDED:
    2 ACCESSIBLE SPACES
16. PER FEMA NO. 29189C0066K, PANEL 66 OF 445, ST. LOUIS COUNTY, MISSOURI AND INCORPORATED AREAS, DATED FEBRUARY 4, 2015, THIS PROPERTY IS ZONE X (UNSHADED) , AREAS DETERMINED TO BE OUTSIDE 0.2% ANNUAL CHANCE FLOODPLAIN.
17. PROPOSED BUILDING HEIGHT = 24'±, MAXIMUM BUILDING HEIGHT 45'.
18. FOR CLARITY, EXISTING ONSITE STRUCTURES HAVE BEEN REMOVED. ONSITE STRUCTURES ARE TO BE DEMOLISHED UNLESS NOTED ON THE PLANS.
19. ALL ROAD CONSTRUCTION SHALL TAKE PLACE BETWEEN THE HOURS OF 7PM AND 5 AM UNLESS OTHERWISE TIMES ARE APPROVED BY THE CITY OF FLORISSANT.

MSD BASE MAP #07H
MSD P#

RAISING CANE'S
2710 N. HIGHWAY 67
FLORISSANT, MO 63303
PROTOTYPE 1 STORE ##296

DEVELOPER/APPLICANT:
Raising Cane's Restaurants, L.L.C.
Attn: LuAron McCormack
6800 Bishop Road
Plano, TX 75024
Tele: 972-769-3364

OWNER:
Tom Lane
Bridle Development Corporation
Suite 100, 727 Craig Road
St. Louis, MO 63141
Tele: 314-567-9944

CONSULTANT:
PREMIER CIVIL ENGINEERING
308 TCW Court
Lake Saint Louis, MO 63367
Phone: (314) 925-7444 Fax: (314) 925-7457
Missouri Certificate of Authority # E-2011000031
Missouri Certificate of Authority # LS-2012007849

ARCHITECT OF RECORD:
CSRS
IMAGINE SHAPE DELIVER
6767 Perkins Road Suite 200 Baton Rouge, LA 70808
Telephone: 225 769-0546 Fax: 225 767-0060
www.csrsonline.com
Attn: Yanez Moree

ENGINEERS AUTHENTICATION
The responsibility for professional engineering liability on this project is hereby limited to the set of plans authenticated by the seal, signature, and date hereunder attached. Responsibility is disclaimed for all other engineering plans involved in this project and specifications not included in this date unless reauthenticated.
STATE OF MISSOURI STEVE MARION NUMBER PE2006007195 PROFESSIONAL ENGINEER
STEVE MARION P.E.
ENGINEER
PE2006007195

REVISIONS:

DRAWING BY:	D.STOSZ
DATE:	9-16-2016
JOB NUMBER:	164601

TITLE:
PRELIMINARY SITE DEVELOPMENT PLAN

SHEET NUMBER:
1 OF 3

COMMENTS:
NOT FOR CONSTRUCTION

\\vault-pc\vault\CIVIL 3D PROJECTS\2016\164601 RAISING CANES FLORISSANT MO\COMMERCIAL\SITE PLAN\SITE PLAN.dwg 9/16/2016 9:45 AM PCE PLOT STYLE.CTB

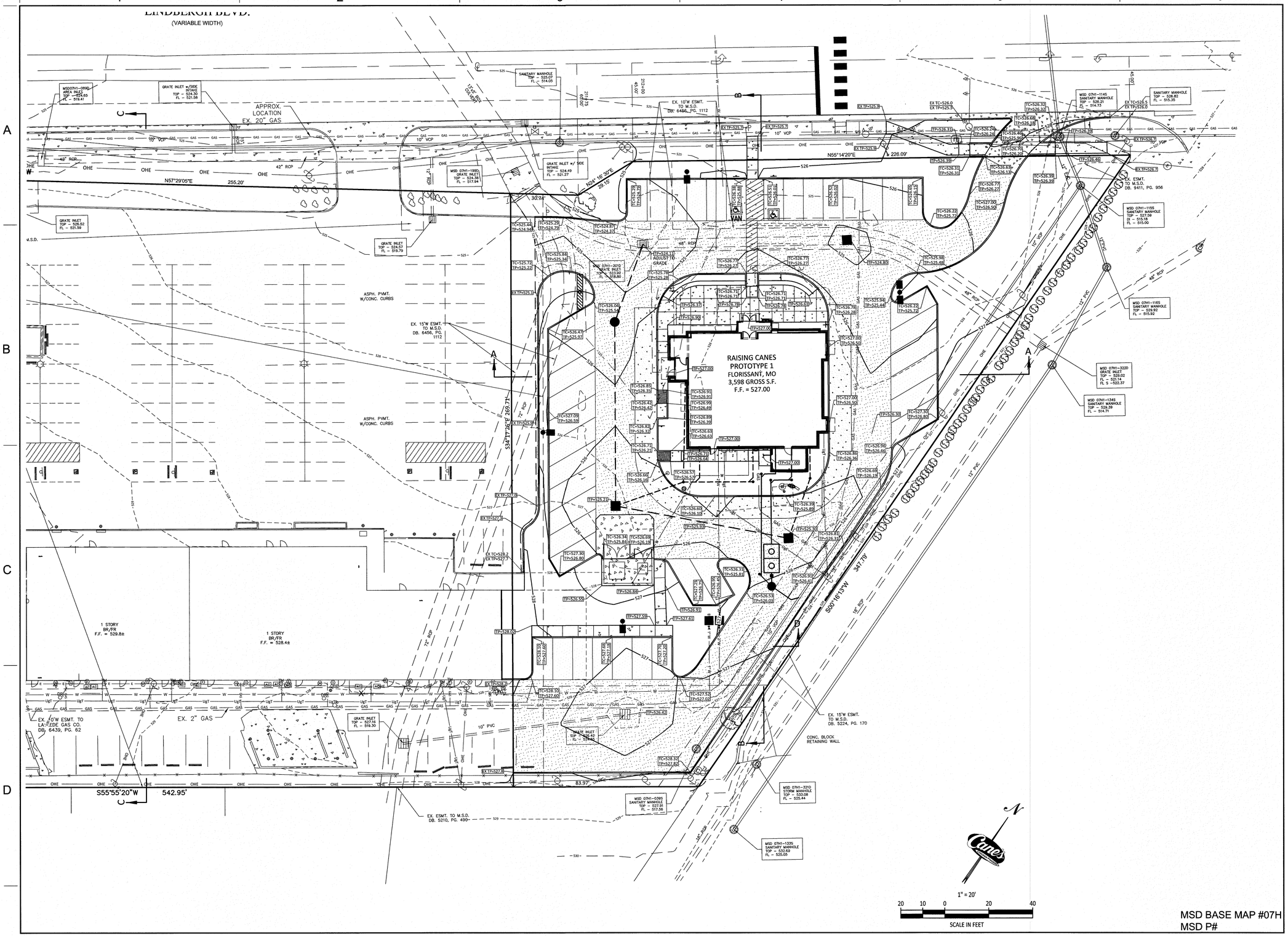

RAISING CANE'S
2710 N. HIGHWAY 67
FLORISSANT, MO 63303
PROTOTYPE 1 STORE ##296

DEVELOPER/APPLICANT:
Raising Cane's Restaurants, L.L.C.
Attn: LuAron McCormack
6800 Bishop Road
Plano, TX 75024
Tele: 972-769-3364

OWNER:
Tom Lane
Bridle Development Corporation
Suite 100, 727 Craig Road
St. Louis, MO 63141
Tele: 314-567-9944

CONSULTANT:
PREMIER CIVIL ENGINEERING
308 TCW Court
Lake Saint Louis, MO 63367
Phone: (314) 925-7444 Fax: (314) 925-7457
Missouri Certificate of Authority # E-2011000031
Missouri Certificate of Authority # LS-2012007849

ARCHITECT OF RECORD:
CSRS
IMAGINE SHAPE DELIVER
6767 Perkins Road Suite 200 Baton Rouge, LA 70808
Telephone: 225 769-0546 Fax: 225 767-0060
www.csrsonline.com
Attn: Yanez Moree

ENGINEERS AUTHENTICATION
The responsibility for professional engineering liability on this project is hereby limited to the set of plans authenticated by the seal, signature, and date hereunder attached. Responsibility is disclaimed for all other engineering plans involved in this project and specifically for any plans which are not wet stamped or digitally signed and sealed and authenticated.
STATE OF MISSOURI
STEVE MARION
NUMBER
PE2006007195
PROFESSIONAL ENGINEER
STEVE MARION
ENGINEER
PE2006007195

REVISIONS:

DRAWING BY:

DATE: 9-16-2016

JOB NUMBER: 164601

TITLE:
PRELIMINARY SITE GRADING PLAN

SHEET NUMBER:
2 OF 3

COMMENTS:
NOT FOR CONSTRUCTION

\\Vault-pc\vault\CIVIL 3D PROJECTS\2016\164601 RAISING CANES FLORISSANT MO\COMMERCIAL\SITE PLAN\SITE PLAN.dwg 9/14/2016 11:21 AM PCE PLOT STYLE.CTB

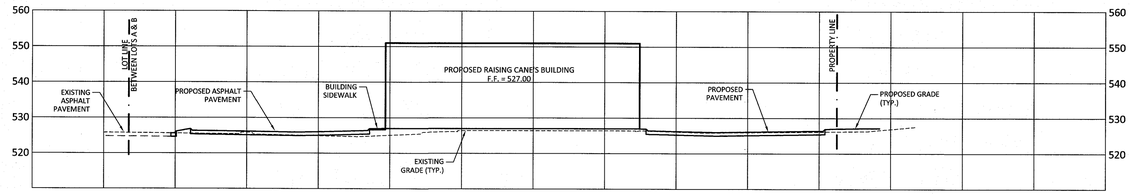

SECTION A-A

HORIZONTAL SCALE: 1" = 20'
VERTICAL SCALE: 1" = 20'

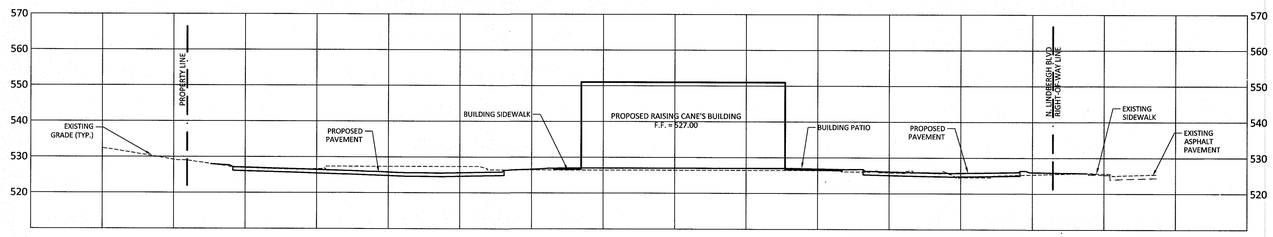

SECTION B-B

HORIZONTAL SCALE: 1" = 20'
VERTICAL SCALE: 1" = 20'

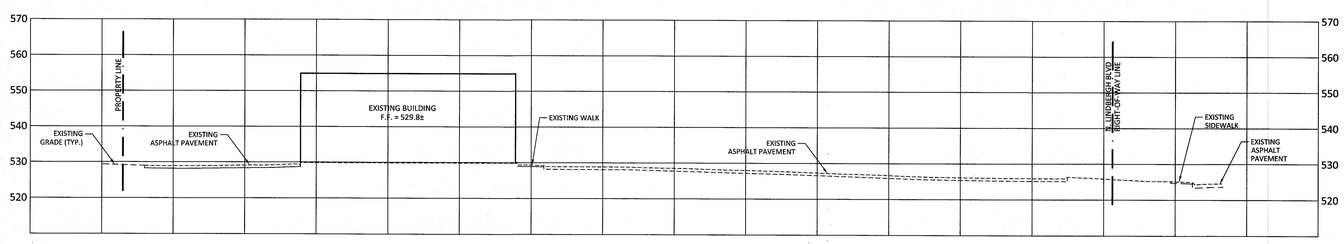

SECTION C-C

HORIZONTAL SCALE: 1" = 20'
VERTICAL SCALE: 1" = 20'

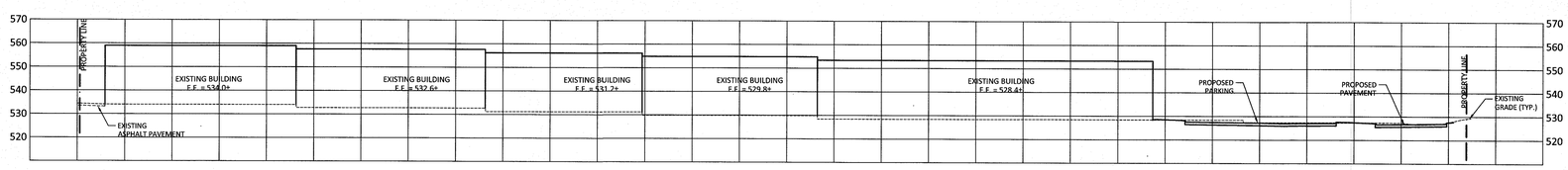

SECTION D-D

HORIZONTAL SCALE: 1" = 30'
VERTICAL SCALE: 1" = 30'

MSD BASE MAP #07H
MSD P#

RAISING CANE'S
2710 N. HIGHWAY 67
FLORISSANT, MO 63303
PROTOTYPE 1 STORE ##296

DEVELOPER/APPLICANT:
Raising Cane's Restaurants, L.L.C.
Attn: LuAron McCormack
6800 Bishop Road
Plano, TX 75024
Tele: 972-769-3364

OWNER:
Tom Lane
Bridle Development Corporation
Suite 100, 727 Craig Road
St. Louis, MO 63141
Tele: 314-567-9944

CONSULTANT:
PREMIER CIVIL ENGINEERING
308 TCW Court
Lake Saint Louis, MO 63367
Phone: (314) 925-7444 Fax: (314) 925-7457
Missouri Certificate of Authority # E-2011000031
Missouri Certificate of Authority # LS-2012007849

ARCHITECT OF RECORD:
CSRS
IMAGINE SHAPE DELIVER
6767 Perkins Road Suite 200 Baton Rouge, LA 70808
Telephone: 225 769-0546 Fax: 225 767-0060
www.csrsonline.com
Attn: Yanez Moree

ENGINEERS AUTHENTICATION
The responsibility for professional engineering liability on this project is hereby limited to the set of plans authenticated by the seal, signature, and date hereunder attached. Responsibility is disclaimed for all other engineering plans involved in this project and specifically excluding all other plans not reauthenticated.
STEVE MARTIN
ENGINEER
PE2000007195

REVISIONS:

DRAWING BY:
DATE: 9-16-2016
JOB NUMBER: 164601
TITLE:
SITE SECTIONS
SHEET NUMBER:
3 OF 3
COMMENTS:
NOT FOR CONSTRUCTION

\\Vault-pc\vault\CIVIL 3D PROJECTS\2016\164601 RAISING CANES FLORISSANT MO\COMMERCIAL\SITE PLAN\SITE PLAN.dwg 9/13/2016 11:18 AM PCE PLOT STYLE.CTB

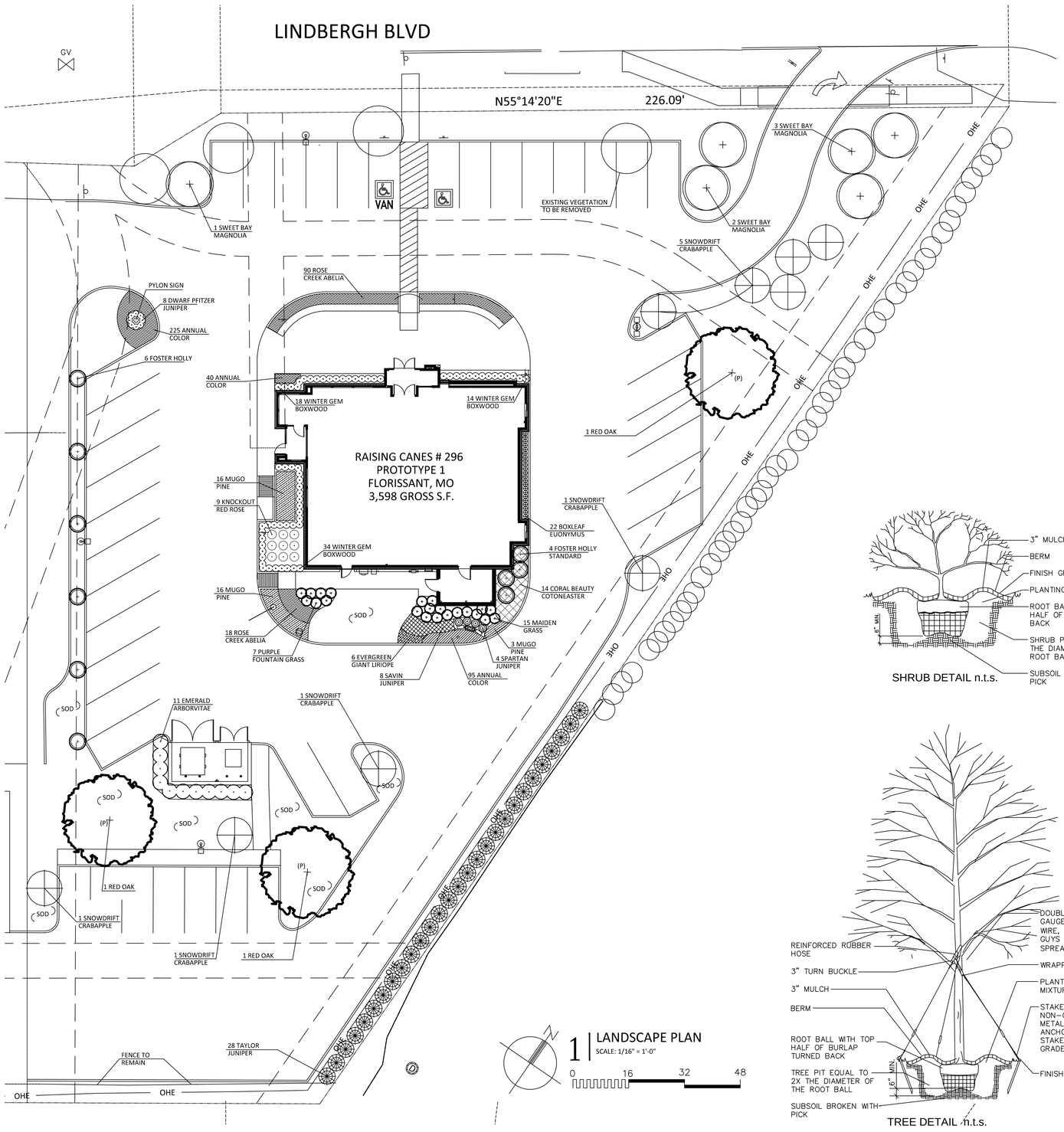

Plant Schedule RC#296 Florissan MO 09/15/2016

Qty	Common Name	Botanical Name	Size	Planting	Remarks
3	Red Oak	Quercus falcata	3"	as shown	Full, specimen form, container grown
6	Evergreen Sweet Bay Ma	Magnolia virginiana var. australis	6'	as shown	Full, specimen form, container grown
9	Snowdrift Crabapple	Malus x 'Snowdrift'	2"	as shown	Full, container grown
28	Taylor Juniper	Juniperus virginiana 'Taylor'	6'	as shown	Full, container grown
4	Foster's Holly	Ilex x attenuata 'Fosteri'	7'-8'	as shown	Tree form, container grown
6	Foster's Holly	Ilex x attenuata 'Fosteri'	6'-7'	as shown	Full, container grown
11	Emerald Arborvitae	Thuja occidentalis 'Emerald'	6'	as shown	Full, container grown
4	Spartan Juniper	Juniperus chinensis 'Spartan'	4-5'	as shown	Full, container grown
22	Boxleaf Euonymus	Euonymus japonicus 'Microphyllus'	3 gal	as shown	Full, container grown
14	Coral Beauty Cotoneaster	Cotoneaster dammeri 'Coral Beauty'	3 gal	@ 30" o.c.	Full, container grown
8	Dwarf Pfitzer Juniper	Juniperus chinensis 'Pfitzeriana Nana'	3 gal	as shown	Full, container grown
9	Knockout Rose Red	Rosa spp. Red Knockout	3 gal	as shown	Full, container grown
15	Maiden Grass	Miscanthus sinensis 'Gracillimus'	3 gal	as shown	Full, container grown
35	Mugo Pine	Pinus mugo	3 gal	@ 20" o.c.	Full, container grown
7	Purple Fountain Grass	Pennisetum alopecuroides	3 gal	as shown	Full, container grown
90	Rose Creek Abelia	Abelia x 'Rose Creek'	3 gal	@ 16" o.c.	Full, container grown
8	Savin Juniper	Juniperus sabina	3 gal	@ 22" o.c.	Full, container grown
66	Wintergem Boxwood	Buxus microphylla japonica 'Winter Gem'	3 gal	@ 15" o.c.	Full, container grown
6	Evergreen Giant Liriope	Liriope muscari 'Evergreen Giant'	1 gal	@ 16" o.c.	Full, container grown
360	Annual Color	Seasonal choice	4" pot	@ 8" o.c.	Full, container grown

LANDSCAPE CALCULATIONS

RC 296 Florissant MO 9/16/2016

1 **Site Area:**

	51,485 s.f.	
	30%	
Required	**15,446 s.f.**	
Provided	**13,368 s.f.**	

2 **Street Trees**

Required: 1 Tree + 3 Shrubs @ 60'

Lindbergh Blvd.	286 l.f.	
Trees Required	6	
Trees Provided	6	Sweet Bay Magnolia
	6	**Total Trees**

3 **Parking Lot Trees (P):**

Parking Area	40	Parking Spaces
Required 1 Trees/15 spaces	3	Trees Required
Provided	3	Red Oak

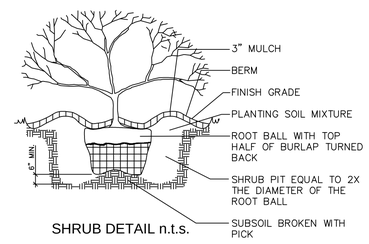

SHRUB DETAIL n.t.s.

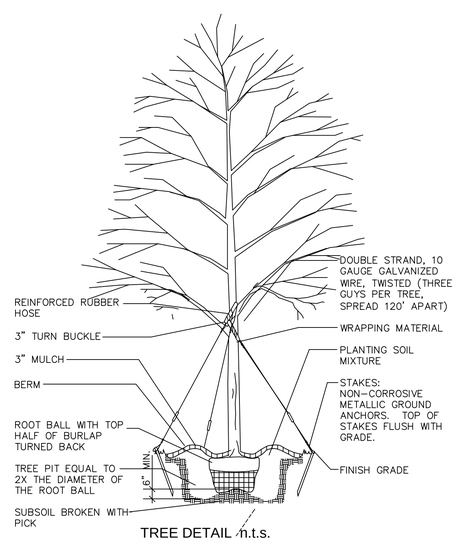

TREE DETAIL n.t.s.

LANDSCAPE NOTES:

1. INSTALL 4" MIN. TOP SOIL TO ALL SOD AND SEED AREAS. CONTRACTOR IS RESPONSIBLE FOR FINE GRADING OF SOD AND SEED AREAS. REMOVE STONES, STICKS, AND DEBRIS LARGER THAN 1".
2. ALL SHRUB AREAS, UNLESS SPECIFIED AS OTHER, TO BE BED MULCHED WITH 3" DEPTH OF PARTIALLY DECOMPOSED HARDWOOD MULCH OVER WEED BARRIER.
3. PLANTING SOIL SHALL CONSIST OF 50% SELECT LOAMY TOPSOIL, 25% PEAT MOSS, 25% PIT RUN SAND.
4. GUARANTEE ALL WORK FOR A PERIOD OF ONE YEAR BEGINNING AT THE DATE OF ACCEPTANCE. MAKE ALL REPLACEMENTS PROMPTLY AS PER DIRECTION OF OWNER.
5. MATERIAL SHALL COMPLY WITH THE LATEST EDITION OF THE AMERICAN STANDARD FOR NURSERY STOCK, AMERICAN ASSOCIATION OF NURSERYMEN.
6. WATER AND MAINTAIN ALL PLANT MATERIALS, SEED AND SOD UNTIL INITIAL ACCEPTANCE.
7. REPAIR AT NO COST TO OWNER ALL DAMAGE TO PROPERTY RESULTING FROM LANDSCAPE WORK.
8. CALL 811 TO NOTIFY UTILITY COMPANY FOR LOCATING ALL UNDERGROUND UTILITIES. AVOID DAMAGE TO UTILITIES DURING THE COURSE OF THE WORK. REPAIR ANY DAMAGE TO UTILITIES, SITE STRUCTURES, ETC., RESULTING FROM LANDSCAPE CONSTRUCTION.
9. COORDINATE INSTALLATION WITH WORK OF OTHER SECTIONS.
10. STAKING AND GUYING OF TREES PER NATIONAL NURSERYMANS STANDARDS.
11. SWEEP AND WASH ALL PAVED SURFACES AND REMOVE ALL DEBRIS RESULTING FROM LANDSCAPE OPERATIONS.
12. FIELD VERIFY SOD LIMITS PRIOR TO INSTALLATION.
13. UNDERGROUND IRRIGATION SYSTEM PLANS DESIGNED BY A LICENSED IRRIGATOR WILL BE SUBMITTED WITH THE BUILDING PERMIT APPLICATION"
14. CONTRACTOR SHALL PROVIDE A MINIMUM 2% SLOPE AWAY FROM ALL STRUCTURES.

Restaurant Support Office:
6800 Bishop Road, Plano, TX 75024
Tele: 972-769-3100 Fax: 972-769-3101

Store:

Raising Cane's
Lindbergh Blvd.
Florissant, MO 63033
Prototype 1
Store #296

Architect & Project Manager:
CSRS
IMAGINE SHAPE DELIVER
6767 Perkins Road Suite 200 Baton Rouge, LA 70808
Telephone: 225 769-0546 Fax: 225 767-0060
www.csrsonline.com

Set Control Information:	Archetype v.16-0719
Setup / Update Date:	YY-MMDD | YY-MMDD
CSRS Project Manager:	MAR

Professional of Record: -

STATE OF MISSOURI
CYNTHIA L. CASH
NUMBER
PLA2015024212
PROFESSIONAL LANDSCAPE ARCHITECT

Sheet Versions / Revisions:

#	Date:	Description:

Sheet Title:

Planting Plan

Project Number:	-
Drawn By:	CCC/FJS 09/14/2016 -

Sheet Number:

L 1.0

INTRODUCED BY COUNCILMAN SIAM
NOVEMBER 14, 2016

BILL NO. 9236 ORDINANCE NO.

ORDINANCE TO AUTHORIZE AN AMENDMENT TO SPECIAL PERMIT NO. 5045, AS AMENDED, TO SLATER ENTERPRISES D/B/A KENTUCKY FRIED CHICKEN TO ALLOW FOR AN EXTERIOR REMODEL FOR THE PROPERTY LOCATED AT 2450 N. HIGHWAY 67.

WHEREAS, the Florissant Zoning Ordinance authorizes the City Council of the City of Florissant, by Special Use Permit, after public hearing thereon, to permit the location and operation of a restaurant; and

WHEREAS, the Florissant City Council has heretofore granted a Special Use Permit to the Slater Enterprises d/b/a Kentucky Fired Chicken for the location and operation of a drive-through, carry-out restaurant located at 2450 N. Highway 67; and

WHEREAS, an application has been filed by Slater Enterprises for an amendment to the said Special Use Permit heretofore granted under Ordinance No. 5045 as amended by Ordinance No. 6585 to authorize the addition of certain conditions; and

WHEREAS, the Planning and Zoning Commission of the City of Florissant at their meeting on October 17, 2016 has recommended that the said Special Use Permit be amended; and

WHEREAS, due notice of public hearing no. 16-11-032 on said application to be held on the 14th day of November, 2016 at 7:30 P.M. by the Council of the City of Florissant was duly published, held and concluded; and

WHEREAS, the Council, following said public hearing, and after due and careful consideration, has concluded that the granting of an amendment to the Special Use Permits authorized by Ordinance No. 5045 as amended, as hereinafter provided would be in the best interest of the City of Florissant.

NOW, THEREFORE, BE IT ORDAINED BY THE COUNCIL OF THE CITY OF FLORISSANT, ST. LOUIS COUNTY, MISSOURI, AS FOLLOWS:

Section 1: Special Use Permit no. 5045, as amended by Ord. No. 6585 is hereby amended for the property located at 2450 N. Highway 67 in a B-3 Zoning District to allow a remodeling of the exterior, according to the proposal prepared by the petitioner as described in related documents presented and according to the attached drawings A2.0 as prepared by GDP Group and dated 8/3/16. Approval is subject to the regulations of these ordinances, and the following additional requirements:

1. GENERAL DEVELOPMENT CONDITIONS.

   Unless, and except to the extent, otherwise specifically provided in Ord. No. 6585, development shall be effected only in accordance with all ordinances of the City of Florissant.

2. PROJECT COMPLETION.

   Construction shall start within 90 days of the issuance of building permits for the project and shall be developed in accordance of the approved final development plan within 180 days of start of construction.

Section 2: Said Special Permit shall be conditioned on and shall remain in full force and effect so long as the conditions set out in Ordinance , as amended, are adhered to.

Section 3: This ordinance shall become in force and effect immediately upon its passage and approval.

Adopted this ____day of _____, 2016.

_____
Jackie Pagano
President of the Council
City of Florissant

Approved this _____ day of _____, 2016.

_____
Thomas P. Schneider
Mayor, City of Florissant

ATTEST:

_____
Karen Goodwin, MMC/MRCC
City Clerk

Posted 10-26-16

CITY OF FLORISSANT

Public Hearing

In accordance with 405.310 of the Florissant Zoning Code a Public Hearing will be held by the City Council of Florissant, MO. in the Council Chambers, 955 Rue St. Francois, on Monday, November 14, 2016 at 7:30 P.M. on the following proposition:

To authorize an amendment to Special Permit No. 5045, as amended by Ordinance No. 6585, to Slater Enterprises d/b/a Kentucky Fried Chicken to allow for exterior remodel for the property located at 2450 N Highway 67 (legal description to govern). Citizens will have an opportunity to be heard. Anyone with special needs should contact the City Clerk at least 5 days before said public hearing by calling 839-7630 or TDD 839-5142.

CITY OF FLORISSANT, Karen Goodwin, MMC City Clerk

FLORISSANT PLANNING & ZONING COMMISSION APPLICATION

City Of Florissant – Public Works 314-839-7648

"Preserve and improve the health, safety, and welfare of our residents, businesses and the general public in the City of Florissant; while at the same time maintaining property values and improving the quality of life in the City of Florissant."

Application is hereby made to the Building Commissioner, Department of Public Works at the City of Florissant, Missouri, to appear before the Planning & Zoning Commission.

Please Print neatly or Type the Following Information:

Property Address: 2450 North Highway 67

Property Owners Name: Slater Enterprises Phone/email: 312/423-1320

Property Owners Address: 82 Green Number Seven Drive

Business Owners Name: Slater Enterprises Phone/email: 312/423-1320

Business Owners Address: 82 Green Number Seven Drive

DBA (**Doing Business As**) KFC

Authorized Agents Name: Katie Helfert Co. Name: Lendlease
(Authorized Agent to Appear Before The Commission)

Agents Address: 1 N. Wacker Drive, Suite 850 Phone/email: 312/423-1320 or katie.helfert@lendlease.com

Request Exterior remodel including new awnings, building lighting and paint.
The existing brick will remain unpainted, no additions or changes to footprint are proposed.

State complete request (print or type only).

IF A TRAFFIC STUDY IS REQUIRED FOR CERTAIN DEVELOPMENTS AND USES THE COST OF THE TRAFFIC STUDY SHALL BE PAID BY THE APPLICANT. PLEASE SUBMIT FOLDED PLANS

Applicant's Signature 9-29-16 **Date**

OFFICE USE ONLY

Received by: CA Receipt # 594449 Amount Paid: 125 Date: 10/4/16

STAFF REMARKS:

DATE APPLICATION REVIEWED:

SIGNATURE OF STAFF WHO REVIEWED APPLICATION

COMMISSION ACTION TAKEN:

RECOMMENDED APPROVAL
PLANNING & ZONING
CHAIRMAN

SIGN. DATE: 10/17/2016

SPECIAL USE PERMIT APPLICATION
TO THE CITY OF FLORISSANT
PLANNING AND ZONING COMMISSION

City Of Florissant – Public Works
314-839-7648

"Preserve and improve the health, safety, and welfare of our residents, businesses and the general public in the City of Florissant; while at the same time maintaining property values and improving the quality of life in the City of Florissant."

PLANNING & ZONING APPROVAL
PLANNING & ZONING
CHAIRMAN
SIGN. DATE: 10/17/2016

Council Ward _____ Zoning _____

Initial Date Petitioner Filed_____
Building Commissioner to complete ward, zone & date filed

SPECIAL PERMIT FOR exterior remodel of existing KFC
Statement of what permit is being sought. (i.e., special permit for operation of a restaurant).

AMEND SPECIAL PERMIT #- 5045 + 6585 TO ALLOW FOR exterior remodel of existing KFC
ordinance # **Statement of what the amendment is for.**

LOCATION 2450 North Highway 67
Address of property.

1) Comes Now Lendlease on behalf of KFC
Enter name of petitioner. If a corporation, state as such. If applicable include DBA (Doing Business As)

and states to the Planning and Zoning Commission that he (she) (they) has (have) the following legal interest in the tract of land located in the City of Florissant, State of Missouri, as described on page 3 of this petition.

Legal interest in the Property) owner of property
State legal interest in the property. (i.e., owner of property, lease).
Submit copy of deed or lease or letter of authorization from owner to seek a special use.

2) The petitioner(s) further state(s) that the property herein described is presently being used for restaurant and that the deed restrictions for the property do not prohibit the use which would be authorized by said Permit.

3) The petitioner(s) further states (s) that they (he) (she) are submitting a detailed site plan of the proposed or existing development showing location and use of all structures, off-street parking, and all other information required by the Zoning Ordinance or determined necessary by the Building Commissioner.

4) The petitioner(s) further state(s) that (he) (she) (they) shall comply with all of the requirements of the City of Florissant, including setback lines and off- street parking.

5) The petitioner (s) further (represent (s) and warrants (s) that they (he) (she) has (have) not made any arrangement to pay any commission gratuity or consideration, directly or indirectly to any official, employee or appointee of the City of Florissant, with respect to this application.

6) The petitioner(s) further state (s) that the Special Use Permit is sought for the following purposes, and no other, as listed in detail, all activities sought to be covered by the permit (i.e.; operation of a business, approval of building and/or site plans (preliminary and / or final), plan approval for signage, etc.):

7) The petitioner (s) state (s) the following factors and reason to justify the permit:
(If more space is needed, separate sheets maybe attached)

Katie Helfert / 312/423-1320 or katie.helfert@lendlease.com

PRINT NAME SIGNATURE email and phone

FOR LEndlease on behalf of KFC

(company, corporation, partnership)

Print and sign application. If applicant is a corporation or partnership signature must be a CORPORATE OFFICER or a PARTNER. NOTE: Corporate officer is an individual named in corporate papers.

8) I (we) hereby certify that, as applicant (circle one of the following):

1. I (we) have a legal interest in the herein above described property.
2. I am (we are) the duly appointed agent(s) of the petitioner (s), and that all information given here is true and a statement of fact.

Permission granted by the Petitioner assigning an agent (i.e. Architect) to present this petition in their behalf, to the Commission and/or Council. The petitioner must sign below, and provide contact information:

PRESENTOR SIGNATURE _____

ADDRESS 1 N. Wacker Drive, Suite 850, Chicago, IL 60606

STREET CITY STATE ZIP CODE

TELEPHONE / EMAIL 312/423-1320 / katie.helfert@lendlease.com

BUSINESS

I (we) the petitioner (s) do hereby appoint Katie Helfert as

Print name of agent.

my (our) duly authorized agent to represent me (us) in regard to this petition.

_____

Signature of Petitioner authorizing an agent

<u>NOTE</u>: When the petitioner and/or his duly authorized agent appears before the Planning and Zoning Commission and to make a presentation, the same individuals must also appear before the City Council at the Public Hearing to make the presentation and no one else will be permitted to make the presentation to the City Council without authorized approval.

IF DESCRIPTIONS, PLATS OR SURVEYS ARE INACCURATE, OR IF THE PETITION APPLICATION IS NOT CORRECT OR COMPLETE, IT WILL BE RETURNED FOR ADDITIONS OR CORRECTIONS.

PROVIDE LEGAL DESCRIPTION OF PROPERTY PERTAINING TO THIS PETITION

(Close legal description with acreage to the nearest tenth of an acre).

Provide a legal description of the property. If part of a shopping center, list address and show part of what shopping center (i.e.: 351 N. Highway 67 part of Florissant Meadows Shopping Center). If property is a single lot, list full written legal description with metes and bounds bearings and dimensions.

ST FERDINAND COMMONS LOT PT 8 RESUB

PROVIDE LOCATION MAP SHOWING AREA INVOLVING THIS PETITION

Provide a drawing of a location map showing the nearest major intersection.

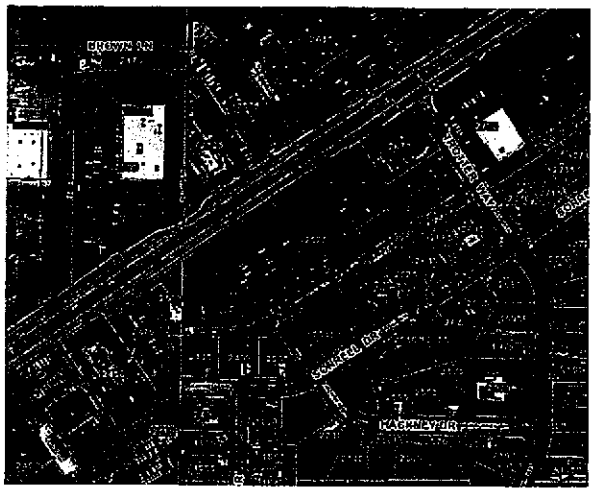

OFFICE USE ONLY

Date Application reviewed _____

STAFF REMARKS: _____

_____

_____

_____

_____

Building Commissioner or Staff Signature

MEMORANDUM

CITY OF FLORISSANT

"Preserve and improve the health, safety, and welfare of our residents, businesses and the general public in the City of Florissant; while at the same time maintaining property values and improving the quality of life in the City of Florissant."

To: Planning and Zoning Commissioners Date: October 12, 2016

From: Philip E. Lum, AIA-Building Commissioner cc: Louis B. Jearls, Jr. PE-PWLF
Director of Public Works
Applicant
File

Subject: **2450 N Highway 67 (KFC)** - Request recommended approval to amend a Special Use, ordinance no. 6585, in a 'B-3' Zoning District.

STAFF REPORT
CASE NUMBER PZ-101716-2

I. PROJECT DESCRIPTION:

This is a request for recommended approval to amend a Special Use, ordinance no. 6585, in a 'B-3' Zoning District to allow a remodeling of the exterior.

II. EXISTING SITE CONDITIONS:

The existing property at **2450 N Highway 67** has a space is a 2721 s.f. according to public record. It has been in operation since 1989 and currently has applied for permit for exterior alterations.

III. SURROUNDING PROPERTIES:

The adjacent property to the west is 2520 and 2510 N Highway 67 in an 'B-3' District both owned by Mission Hills Development. The adjacent property to the East is 2470 N Highway 67 also in a 'B-3' District which is Simply Thai restaurant.

IV. STAFF ANALYSIS:

The application is accompanied by one professional plan A2.0 dated with a plot date only of August 3, 2016 with proposed changes. Staff has included one color picture of the property and has the following review comments:

General: The Existing tan color building appears at first to consist of painted masonry, but upon close examination, the brick is tan and is not painted. White and gray areas of existing paint are noted on the elevations as existing ceramic tile to be repainted.

A2.0 : Elevations show the following changes:

a. New KFC channel letter signage 8.5'x2.5'=21.25 s.f.
b. Painted coping (top trim).
c. New pre-finished red louvered awnings above doors and windows.
d. Other smaller 16 s.f. (world famous chicken) sign and 8 s.f. (meals) sign.
e. Replace tower sign with 2 signs.
f. New pre-finished red metal panels on front of tower attached to tower.

V. MASONRY ORD. ANALYSIS

This proposal freshens the exterior with a new look and painted areas remain painted. Brick is to remain unpainted.

VI. STAFF RECOMMENDATIONS:

1. The exterior changes affect the existing Special Use.
2. Any other items in need of change to the ordinance may be considered.

(end report)

October 12, 2016 Suggested Motion to Amend a Special Use:

1. I move to recommend recommended approval to amend a Special Use, ordinance no. 6585, at **2450 N Highway 67** in a 'B-3' Zoning District to allow a remodeling of the exterior, according to the proposal prepared by the petitioner as described related documents presented **and according to the attached drawings A2.0 as prepared by GDP Group and dated 8/3/16.** Approval is subject to the regulations of these ordinances, and the following additional requirements:

   1. **GENERAL DEVELOPMENT CONDITIONS.**

      a. Unless, and except to the extent, otherwise specifically provided in ordinance no. 6585, development shall be effected only in accordance with all ordinances of the City of Florissant.

   2. **PROJECT COMPLETION.**
      Construction shall start within 90 days of the issuance of building permits for the project and shall be developed in accordance of the approved final development plan within 180 days of start of construction.

(End of suggested motion **10/12/16**)

GENERAL NOTES

A. G.C. TO PROVIDE VERIFICATION OF EXISTING STRUCTURAL ATTACHMENTS FOR NEW BUILDING ELEMENTS. IF REQUIRED PROVIDE ADDITIONAL BLOCKING PER VENDOR'S RECOMMENDATION.

B. ALL SIGNAGE, GRAPHICS, AND AWNINGS ARE SHOWN AS A DESIRED BEST CASE LAYOUT. A FINAL SIGNAGE SUBMITTAL SHALL BE DEVELOPED BY THE SIGNAGE VENDOR AND PERMITTED BY THE SIGN VENDOR UNDER A SEPARATE PERMIT FROM THE BUILDING PERMIT.

C. SIGNAGE/STENCILS DONE BY OTHERS

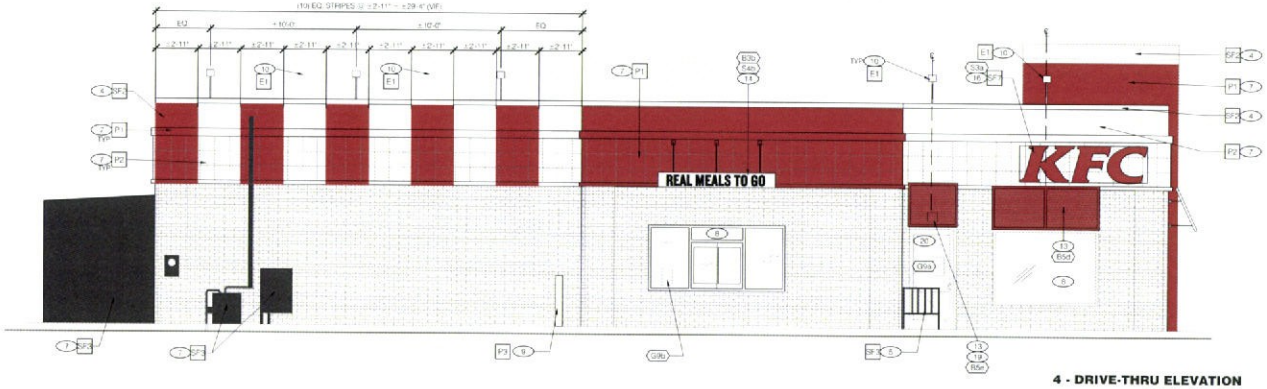

4 - DRIVE-THRU ELEVATION
Scale: 1/4"=1'-0"

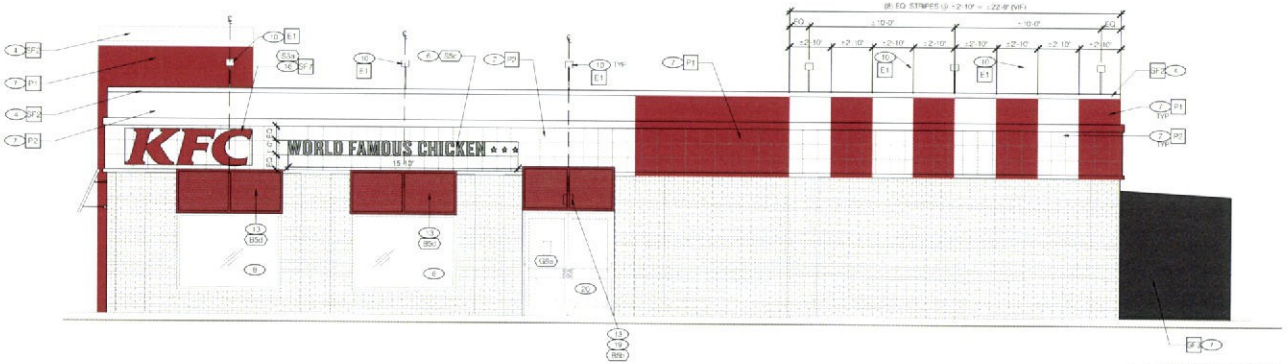

3 - ENTRY ELEVATION
Scale: 1/4"=1'-0"

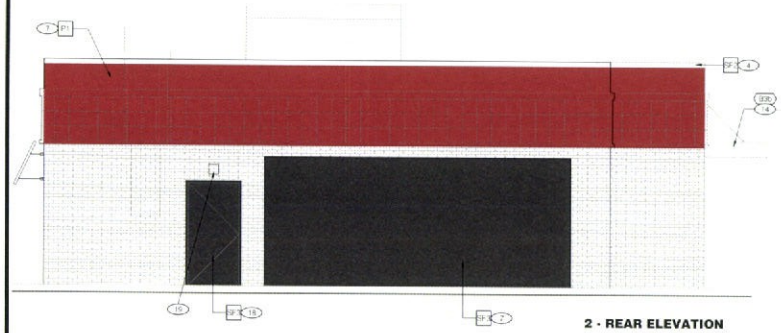

2 - REAR ELEVATION
Scale: 1/4"=1'-0"

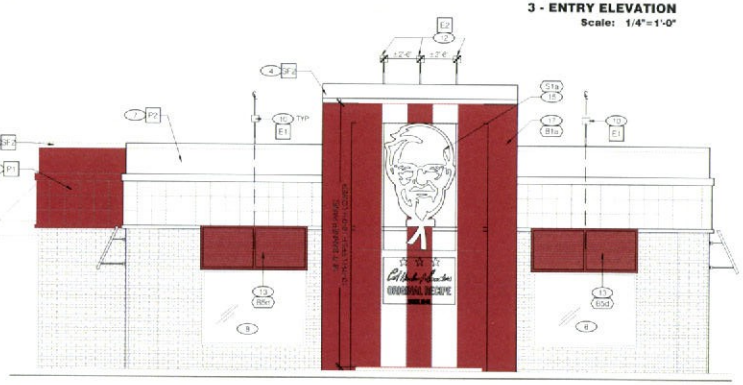

1 - FRONT ELEVATION
Scale: 1/4"=1'-0"

FINISH SCHEDULE

MARK	LOCATION	MFG / CONTACT		MODEL # / COLOR	REMARKS
P1	EXTERIOR PAINT	BENJAMIN MOORE	KURT MCCLELLAND P: (800) 826-7417 C: (513) 742-9368 Kurt.McClelland@benjaminmoore.com	ALPA EXTERIOR PAINT EXTRA RED 2047-70 LOW LUSTER (BM)	
P2	EXTERIOR PAINT	BENJAMIN MOORE	KURT MCCLELLAND P: (800) 826-7417 C: (513) 742-9368 Kurt.McClelland@benjaminmoore.com	REGAL SELECT EXTERIOR PAINT WHITE (BM) VERY DEEP BASE LOW LUSTER (BM)	
P3	EXTERIOR PAINT	BENJAMIN MOORE	KURT MCCLELLAND P: (800) 826-7417 C: (513) 742-9368 Kurt.McClelland@benjaminmoore.com	ALPA EXTERIOR PAINT BLACK HORIZON 2124-30 LOW LUSTER (BM)	
MP1	EXTERIOR METAL	BENJAMIN MOORE	KURT MCCLELLAND P: (800) 826-7417 C: (513) 742-9368 Kurt.McClelland@benjaminmoore.com	CORDTECH POLYESTER URETHANE CUSTOM MATCH BENJAMIN MOORE 2124-30 BLACK HORIZON (BM)	CORDTECH PRIMER (TYP)
MP2	EXTERIOR METAL	BENJAMIN MOORE	KURT MCCLELLAND P: (800) 826-7417 C: (513) 742-9368 Kurt.McClelland@benjaminmoore.com	CORDTECH POLYESTER URETHANE CUSTOM MATCH BENJAMIN MOORE 2047-70 RED CHILI (BM)	CORDTECH PRIMER (TYP)
MP3	EXTERIOR METAL	BENJAMIN MOORE	KURT MCCLELLAND P: (800) 826-7417 C: (513) 742-9368 Kurt.McClelland@benjaminmoore.com	CORDTECH POLYESTER URETHANE CUSTOM MATCH BENJAMIN MOORE 2124-30 BLACK HORIZON (BM)	CORDTECH PRIMER (TYP)
MP4	EXTERIOR METAL	BENJAMIN MOORE	KURT MCCLELLAND P: (800) 826-7417 C: (513) 742-9368 Kurt.McClelland@benjaminmoore.com	CORDTECH POLYESTER URETHANE CUSTOM MATCH BENJAMIN MOORE 2088-70 ICE BLUE (BM)	CORDTECH PRIMER (TYP)

FINISH NOTES

1. ~~NEW MP EXTERIOR LIGHT FIXTURE (CENTERED INSTALLED ABOVE EXISTING OPENING EXISTING LOCATION) ELECTRICAL CONTRACTOR TO VERIFY CAPACITY ON EXISTING CIRCUITS FOR LIGHTS~~
2. PAINT WALL SURFACE BEHIND NEW AWNINGS
3. ~~PAINT 4" WIDE DOROLEY WINDOW SURROUND AS INDICATED~~
4. EXISTING PARAPET COPING TO BE REPAIRED, SEALED AND PAINTED
5. EXISTING RAILING TO BE PAINTED SF-3
6. STENCIL PAINTED GRAPHIC ELEMENT
7. NEW EXTERIOR PAINT TREATMENT
8. EXISTING WINDOWS
9. EXISTING BOLLARD TO BE PAINTED P-3
10. NEW EXTERIOR LIGHT FIXTURE CENTERED ON WINDOW AND/OR GRAPHIC, OTHERWISE AS INDICATED IN ELEVATION. PATCH AND REPAIR ROOF MEMBRANE AT FIXTURE ATTACHMENT POINT. ELECTRICAL CONTRACTOR TO VERIFY CAPACITY ON EXISTING CIRCUITS FOR LIGHTS
11. ~~REINSTALL ADDRESS NUMBERS AFTER PAINTING~~
12. NEW SIGNAGE ACCENT LIGHT FIXTURE. REFER TO LIGHT FIXTURE SCHEDULE. ELECTRICAL CONTRACTOR TO VERIFY CAPACITY ON EXISTING CIRCUITS FOR LIGHTS
13. NEW PRE-FINISHED METAL LOUVERED AWNINGS (AWNINGS ABOVE DOORS TO HAVE RAIN DIVERTERS)
14. NEW DRIVE THRU CANOPY
15. NEW STAND OFF METAL PANEL SYSTEM W/ VINYL GRAPHICS
16. NEW KFC INDIVIDUAL LETTER FACES AND CABINET CANS
17. NEW METAL PANEL SYSTEM ATTACHED TO AND HELD OFF EXISTING TOWER. TOP OF PANELING TO ALIGN WITH BOTTOM OF EXISTING TOWER COPING
18. PAINT EXISTING EXTERIOR DOOR AND FRAME
19. NEW EXTERIOR WALL LIGHT M-3
20. EXISTING STOREFRONT

IMAGE COMPONENTS SCHEDULE

TAG	ITEM DESCRIPTION	ELEC
SIGNAGE		
S1a	VINYL LOGO GRAPHICS FOR TOWER PANEL - FULL HT	
S1b	VINYL LOGO GRAPHICS FOR TOWER PANEL - HALF HT	
S2a	KFC CHANNEL LETTER FACE REPLACEMENT - 30" RED	X
S2b	KFC CHANNEL LETTER FACE REPLACEMENT - 24" RED	X
S2c	KFC CHANNEL LETTER FACE REPLACEMENT - 30" WHITE	X
S2d	KFC CHANNEL LETTER FACE REPLACEMENT - 24" WHITE	X
S3a	KFC CHANNEL LETTERS - 30" RED	X
S3b	KFC CHANNEL LETTERS - 24" RED	X
S3c	KFC CHANNEL LETTERS - 30" WHITE	X
S3d	KFC CHANNEL LETTERS - 24" WHITE	X
S3e	KFC CHANNEL LETTERS - 18" RED	X
S4a	"REAL MEALS TO GO" DIMENSIONAL LETTERS FOR 15' DT CANOPY	
S4b	"REAL MEALS TO GO" VINYL LETTERS FOR 8' DT CANOPY	
S5a	"WORLD FAMOUS CHICKEN" LETTERS - 18" DIMENSIONAL PIN MOUNT	
S5b	"WORLD FAMOUS CHICKEN" 18" LETTERS - PAINT	
S5c	"WORLD FAMOUS CHICKEN" 12" LETTERS - PAINT	
S5d	"WORLD FAMOUS CHICKEN" STACKED LETTERS-PAINT	
S6	"REAL MEALS" BUCKET SIGN	
S7	"REAL MEALS TO GO" BUCKET SIGN	X
S8a	"HARD WAY" PAINT TEMPLATE - 5' ROUND	
S8d	"HARD WAY" PAINT TEMPLATE - HORIZONTAL	
G9a	STORE HOURS - ENTRY	
G9b	STORE HOURS - DT WINDOW	
BUILDING EXTERIOR ELEMENTS		
B1a	TOWER PANEL WITH LOGO AND GRAPHICS - FULL HEIGHT WITH EXTENDER	
B1b	TOWER PANEL WITH LOGO AND GRAPHICS - HALF HT	
B3c	DT WINDOW CANOPY - 8' WIDE	X
B5a	SHUTTERED AWNINGS - 6'-0" WIDE	
B5b	SHUTTERED AWNINGS - 6'-8" WIDE	
B5c	SHUTTERED AWNINGS - 7'-0" WIDE	
B5d	SHUTTERED AWNINGS - 7'-8" WIDE	
B5e	SHUTTERED AWNINGS - 3'-4" WIDE	

KFC

STATE OF MISSOURI
MARK S. SALOPEK
ARCHITECT

Mark S. Salopek – Architect
A-2004032558

10/19/2016

GPD GROUP
Professional Corporation,
520 South Main St., Suite 2531
Akron, OH 44311
330.572.2100 330.572.2101

DRAWING SUBMITTALS

DESIGN DEVELOPMENT REVIEW SET		
STATUS	REVIEW	
DATE	BY	
PERMIT SET SUBMITTAL		
STATUS	SET	
DATE	BY	

REVISION

Mark	Date	By

PROJECT TITLE
"K-90 SERIES 6000 TO AMERICAN SHOWMAN" TEMPLATE VERSION
RELEASE 2.0 JAN. 2016

INCENTIVE SCOPE

2450 NORTH HWY 67
FLORISSANT, MO 63033

COMMISSION NO. D280004
GPD JOB NO. 2016392.01

SHEET TITLE
EXTERIOR ELEVATIONS

SHEET NO.
A-2.0

THIS DOCUMENT IS THE PROPERTY AND EXCLUSIVE PROPERTY OF KFC. REPRODUCTION OF THIS DOCUMENT AND THE INFORMATION IT CONTAINS OR ANY USE OF THIS DOCUMENT OTHER THAN THE SPECIFIC PROJECT FOR WHICH IT WAS PREPARED WITHOUT THE EXPRESS CONSENT OF KFC.
PLOTTED: Wednesday, August 31, 2016 3:12 PM

INTRODUCED BY COUNCILMAN HENKE
NOVEMBER 14, 2016

BILL NO. 9237 ORDINANCE NO.

ORDINANCE TO REZONE FOR QUALITY ASSURANCE GROUP, LLC FOR THE PROPERTY LOCATED AT 150 WASHINGTON FROM B-2, CENTRAL BUSINESS DISTRICT & HB, HISTORIC BUSINESS DISTRICT TO ALLOW FOR THE ENTIRE PROPERTY TO BE ZONED HB, HISTORIC BUSINESS DISTRICT.

WHEREAS, Ordinance No. 1625, as amended, establishes within the City of Florissant district classifications for the purpose of regulating their construction and use of land, buildings and property within the said various districts, and said Ordinance provides the nature, kind and character of buildings that may be erected in each of the said districts and the use to which the land and buildings may be put; and

WHEREAS, the Planning and Zoning Commission of the City of Florissant has recommended approval to the City Council that Ordinance No. 1625 be amended to change the classification of certain property identified as 150 Washington from B-2 Central Business District & HB Historic District to allow for the entire property to be zoned HB "Historic Business District" and

WHEREAS, due and lawful notice of a public hearing no. 16-11-033 on said proposed zoning change to be held on Monday, November 14, 2016, at 7:30 P.M. by the Council of the City of Florissant was duly published; and

WHEREAS, said public hearing was duly and properly held by the Council of the City of Florissant at the time and place provided in said notice at which time said public hearing was concluded, and all comments, statements and suggestions made by those present and concerning the proposed change were heard and considered by the Council; and

WHEREAS, the Council, following said public hearing, and after due and careful deliberation, has concluded that the amendment of Ordinance No. 1625, as amended, as hereinafter set forth, to be in the best interest of the public health, safety and welfare of the City of Florissant.

NOW, THEREFORE, BE IT ORDAINED BY THE COUNCIL OF THE CITY OF FLORISSANT, ST. LOUIS COUNTY, MISSOURI, AS FOLLOWS:

Section 1: Ordinance No. 1625, as amended, is hereby further amended by changing the classification of the following described property from B-2, Central Business District & HB Historic District to allow for the entire property to be zoned HB "Historic Business District".

150 Washington

Section 3: The Director of Public Works is hereby authorized and directed to change the City map in accordance with the attached site plan known as Exhibit "A".

Section 4: Except for the change of classification of the property hereinabove described, Ordinance No. 1625, as amended, shall remain in full force and effect and shall apply in all of its terms and provisions to the property herein described according to the new classification thereof.

Section 5: This ordinance shall become in force and effect upon its passage and approval as provided by law.

Adopted this _____ day of _____, 2016.

_____
Jackie Pagano
President of the Council
City of Florissant

Approved this _____ day of _____, 2016.

_____
Thomas P. Schneider
Mayor, City of Florissant

ATTEST:

_____
Karen Goodwin, MMC/MRCC
City Clerk

CITY OF FLORISSANT

PUBLIC HEARING NOTICE

A Public Hearing will be held by the Florissant City Council in the Council Chambers, 955 rue St. Francois, Florissant, MO., on Monday, November 14, 2016 at 7:30 p.m. on the following proposition, to-wit:

To rezone for Quality Assurance Group, LLC for the property located at 150 Washington from B-2, Central Business District & HB Historic Business District to allow for the entire property to be zoned HB, Historic Business District.

Citizens will have an opportunity to be heard. Anyone with special needs should contact the City Clerk at least 5 days before said public hearing by calling 839-7630 or TDD 839-5142.

CITY OF FLORISSANT, Karen Goodwin, City Clerk MMC.

FLORISSANT PLANNING & ZONING COMMISSION APPLICATION

City Of Florissant – Public Works
314-839-7648

Application is hereby made to the Building Commissioner of the Department of Public works Office at the City of Florissant, Missouri, to appear before the Planning & Zoning Commission

Please Print or Type The Following Information

Property Address: 150 Washington Street, Florissant, MO 63031

Property Owners Name: Quality Assurance Group, LLC Phone #: 314-921-9498

Property Owners Address: 100 Washington Street, Florissant, MO 63031

Business Owners Name: Alexandria's Cellar Phone #: 314-921-9498

Business Owners Address: 100 Washington Street, Florissant, MO 63031

DBA (**Doing Business As**) Quality Assurance Group, LLC / Alexandria's Cellar

Authorized Agents Name: Paul Boyer CO. Name: Civil Engineering Design Consultants, Inc.
(Authorized Agent to Appear Before The Commission)

Agents Address: 11402 Gravois Road, Suite 100, St. Louis, MO 63126 Phone #: 314-729-1400

Request Request to rezone property from B2 / HB to entire property being zoned HB-Historical Business

State complete request (print or type only).

IF A TRAFFIC STUDY IS REQUIRED FOR CERTAIN DEVELOPMENTS AND USES THE COST OF THE TRAFFIC STUDY SHALL BE PAID BY THE APPLICANT. PLEASE SUBMIT FOLDED PLANS

Applicant's Signature 10/3/16 **Date**

OFFICE USE ONLY

Received by: CL Receipt # 594448 Amount Paid: 125.00 Date: 10/4/16

STAFF REMARKS:

DATE APPLICATION REVIEWED:

SIGNATURE OF STAFF WHO REVIEWED APPLICATION

COMMISSION ACTION TAKEN:

RECOMMENDED APPROVAL
PLANNING & ZONING
CHAIRMAN

SIGN. DATE: 10/17/2016

Planning & Zoning Application
Page 1 of 1 – Revised 9/28/10

RE-ZONING APPLICATIONTO THE PLANNING AND ZONING COMMISSION CITY OF FLORISSANT, MISSOURI

PLANNING & ZONING ACTION:

Address of Property:

150 Washington Street

Council Ward 5 Zoning B2-Central Business Di HB-Historical Business

Initial Date Petitioner Filed_____
(Building Commissioner complete)

RECOMMENDED APPROVAL
PLANNING & ZONING
CHAIRMAN
SIGN. DATE: 10/17/2016

PETITION FOR REZONING FROM A CURRENTLY ZONED B2 / HB DISTRICT TO
Enter current zoning district

A HB-Historical Business ZONING DISTRICT IN COUNCIL WARD 5
Enter zoning classification request

1) Comes Now Quality Assurance Group LLC
(Individual's name, corporation, partnership, etc.)
Enter name of petitioner. If a corporation, state as such. If applicable include DBA (Doing Business As).

and states to the Planning and Zoning Commission that he (she) (they) has (have) the following legal interest in the tract of land located in the City of Florissant, State of Missouri, described on page 3 of this petition.

Legal interest in the Property) Owner of property
State legal interest in the property. (i.e., owner of property, lease); also submit copy of deed or lease or letter of authorization from owner to seek a special use.

If other than title, give date of contract N/A and expiration date of Contract N/A

A. The petitioner(s) hereby state that he (she) (they) is (are) hereby submitting a description of the entire parcel or tract of land owned by the holder of the fee simple title, giving bearing and distances.

B. The petitioner (s) hereby states that he (she) (they) is (are) submitting a description of the property for which the Permit is petitioned, giving bearings & distances (metes and bounds).Not required if description is identical to "A".

C. The petitioner (s) hereby states that he (she) (they) is (are) submitting a survey or plat of the property described in 'A" above, drawn to scale of 100 feet or less to the inch, referenced to point easily located on the ground as street intersection, centerline of creek having a generally known name, etc., showing dimensions (bearings and distances) of property, north point and scale. If property is being described in "A" above, designate said property and show dimensions of same.

D. Acreage to nearest tenth of an acre of the property for which rezoning is petitioned 0.71 ac.

2. The petitioner(s) hereby further state(s) that the property herein described in this petition is presently zoned in a B2-Central Business Dist. / HB-Historical Business District and is presently being used
Enter current zoning district.
for vacant residence
State current use of property, (or, state: vacant).

3. The petitioner(s) hereby state(s) that the following factors justify the rezoning of the property hereby described in this petition: (If more space is needed, separate sheets may be attached).

Property currently has dual zoning (B2 / HB). Request to rezone property entirely to HB zoning for uniformity of use. HB zoning is also consistent with the HB zoning of the adjacent properties having frontage along Washington Street.

List factor's to justify the re-zoning.

4. The petitioner(s) further states(s) that they (he) (she) can comply with all of the requirements of the City of Florissant, including setback lines and off-street parking

5. The petitioner(s) further state(s) that they (he) (she) further represent(s) and warrants that they (he) (she) has (have) not made any arrangement to pay any commission, gratuity or consideration, directly or indirectly, to any official employee or appointee of the City of Florissant, with respect to this application.

PRINT PETITIONER'S NAME Mr. Jimmie White
Print Name

PETITIONER(S) SIGNATURE (S) _____

FOR Quality Assurance Group LLC
(company, corporation, partnership)

Print and sign application. If applicant is a corporation or partnership signature must be a CORPORATE OFFICER or PARTNER. NOTE: Corporate officer is an individual named in corporate papers.

6. I (we) hereby certify that (indicate one of the following):
(X) I (we) have a legal interest in the herein above described property.
( ) I am (we are) the duly appointed agent(s) of the petitioner (s), and that all information given here is true and a statement of fact.
Petitioner may assign an agent to present petition to the Commission and Council. The agent must sign the petition in this section, and provide address and telephone number

SIGNATURE _____

ADDRESS 100 Washington Street, Florissant, MO 63031
STREET CITY STATE ZIP CODE

TELEPHONE NUMBER (314) 921-9498
BUSINESS

I (we) the petitioner (s) do hereby appoint Paul Boyer with Civil Engineering Design Consultants as
Print name of agent.
my (our) duly authorized agent to represent me (us) in regard to this petition.

_____
Signature of Petitioner(s) or Authorized Agent

NOTE: Be advised when the petitioner and/or his duly authorized agent appears before the Planning and Zoning Commission and make the presentation, the same individuals must also appear before the City Council for that presentation. Also if the descriptions of plats or surveys are incorrect, or if the petition form is not correctly and completely filled out it will be returned for corrections and may have to be re-submitted.

Please check the box for the appropriate type of operation then fill in applicabe section (a), (b) or (c). Corporations are to submit copy of Missouri corporate papers with registration papers.

1) Type of Operation: Individual: [ ] Partnership: [ ] Corporation: [X]

(a) If an individual:

(1) Name and Address _____

(2) Telephone Number _____

(3) Business Address _____

(4) Date started in business _____

(5) Name in which business is operated if different from (1) _____

(6) If operating under a fictitious name, provide the name and date registered with the State of Missouri, and a copy of the registration.

(b) If a partnership:

(1) Names & addresses of all partners _____

(2) Telephone numbers _____

(3) Business address _____

(4) Name under which business is operated _____

(5) If operating under fictitious name, provide date the name was registered with the State of Missouri, and a copy of the registration.

(c) If a corporation:

(1) Names & addresses of all partners Jimmie and Tina White
100 Washington Street
Florissant, MO 63031

(2) Telephone numbers (314) 921-9498

(3) Business address 100 Washington Street, Florissant, MO 63031

(4) State of Incorporation & a photocopy of incorporation papers Missouri

(5) Date of Incorporation 04/10/2014

(6) Missouri Corporate Number LC1392866

(7) If operating under fictitious name, provide the name and date registered with the State of Missouri, and a copy of registration. _____

(8) Name in which business is operated Quality Assurance Group LLC

(9) Copy of latest Missouri Anti-Trust. (registration of corporate officers) If the property location is in a strip center, give dimensions of your space under square footage and do not give landscaping information.

Please provide a Plat with the following information requested:

1. The location of present property, U.S. survey, section, township and range lines of incorporated areas.
2. The proposed location and width of streets, alleys, lots, building and setback lines and easements.
3. Existing sanitary and storm sewers, water mains, culverts and other underground structures within the tract or immediately adjacent thereto. The location and size of the nearest water main and sewer or outlet are to be indicated upon the plat.
4. The title under which the proposed subdivision is to be recorded and the name of the petitioner platting the tract.
5. The names and adjoining boundaries of all adjoining subdivisions and the names of owners of adjoining parcels of un-subdivided land as shown on public records.
6. Existing contours with intervals of not more than five (5) feet referred to sea level datum.
7. North point, scale and date.
8. Location of parks and other public or semi-public area.
9. Statement of type of sanitary sewers or other sewage disposal facilities.

PLEASE SUBMIT NINE (9) FOLDED COPIES OF THE FOLLOWING:

1. Plan or drawing showing zoning of adjoining properties.
2. Plan or drawing showing location of property in relation to major streets and all adjoining properties.
3. Drawing showing measurement of tract and overall area of tract.
4. Plan or drawing showing existing/proposed structures, parking layout, landscaping, parking lighting, signage and trash container screening.

PROVIDE LEGAL DESCRIPTION OF PROPERTY PERTAINING TO THIS PETITION

(Close legal description with acreage to the nearest tenth of an acre).

Provide a legal description of the property, list full written legal description with bearings and distances.

PROVIDE LOCATION MAP SHOWING AREA INVOLVING THIS PETITION

Provide a drawing of a location map showing the nearest major intersection or include on plans.

(see plans)

STAFF CHECK LIST –PLAT REVIEW SHEET

ADDRESS OF PROPERTY _____ CURRENT ZONING _____

PROPERTY OWNER OF RECORD _____ PHONE NO. _____

AUTHORIZED AGENT _____ PHONE NO. _____

PROPOSAL _____

INFORMATION REQUIRED ON PLATS

A. Preliminary Plat. The preliminary plat shall show:

☐1. The location of present property, U.S. survey, section, township and range lines of incorporated areas.

☐2. The location and width of streets, alleys, lots, building and setback lines and easements.

☐3. Existing sanitary and storm sewers, water mains, culverts and other underground structures within the tract or immediately adjacent thereto. The location and size of the nearest water main and sewer or outlet are to be indicated upon the plat.

☐4. The title under which the proposed subdivision is to be recorded and the name of the subdivider platting the tract.

☐5. The names and adjoining boundaries of all adjoining subdivisions and the names of owners of adjoining parcels of unsubdivided land as shown on public records.

☐6. Existing contours with intervals of not more than five (5) feet referred to sea level datum.

☐7. North point, scale and date.

☐8. Location of parks and other public or semi-public area.

☐9. Statement of type of sanitary sewers or other sewage disposal facilities.

B. Final Plat. The final plat shall show:

☐1. The boundary lines of the area being subdivided with accurate distances and bearings; all U.S. survey, section, township and range lines.

☐2. All proposed and existing streets and alleys with their widths and names.

☐3. The outboundary dimensions of any property which is offered for dedication for public use.

☐4. The boundaries of all adjoining lands and all adjacent streets and alleys with their widths and names.

☐5. All lot lines and an identification system for all lots and blocks.

☐6. Building lines and easements provided for public use, services or utilities with figures showing their dimensions.

☐7. All dimensions, both linear and angular, necessary for locating boundaries of subdivisions, lots, streets, alleys, easements for building lines and of any other areas for public or private use; the linear dimensions are to be expressed in feet and decimals of a foot.

☐8. Radii, arcs, points of tangency and radii for all rounded corners.

☐9. All survey monuments and bench marks, together with their descriptions.

☐10. Name of subdivision and location of property subdivided with regard to township, range and section, U.S. survey; points of compass, scale of plan and name of owner or owners.

☐11. Certification by a registered land surveyor that the plat represents a survey made by him/her; that all the necessary survey monuments are correctly shown thereon; and that all lots shown have the required minimum area. Also impressed thereon, and affixed thereto, the personal seal and signature of the registered land surveyor by whom, or under whose authority and direction, the plat was prepared in conformance with Missouri Revised Statutes.

The seal and signature should be in substantially the following form:

I, _____, Missouri Land Surveyor, do hereby certify that this plat is a correct representation of a survey made by me on the ____ day of _____, 20____, at the request of _____ for the purpose of subdividing said tract into lots as shown.

LAND
SURVEYOR'S
SEAL

Surveyor's Name. L.S. Number

12. Private restrictions and trusteeships and their periods of existence. Should such restrictions and trusteeships be filed as a separate instrument, reference to such instrument shall be made on the plat. Plats shall contain proper acknowledgments of owners and holders of deeds of trust.

Staff recommendations for site development plans: _____

_____

_____

_____

_____

_____

General Staff Comments: _____

_____

_____

_____

_____

_____

_____

MEMORANDUM

CITY OF FLORISSANT

"Preserve and improve the health, safety, and welfare of our residents, businesses and the general public in the City of Florissant; while at the same time maintaining property values and improving the quality of life in the City of Florissant."

To: Planning and Zoning Commissioners Date: October 12, 2016

From: Philip E. Lum, AIA-Building Commissioner cc: Louis B. Jearls, Jr.PE-PWLF
Director of Public Works
Applicant
File

Subject: **150 Washington**- Request Recommended Approval of a Rezoning from an 'B-2 and HB' Zoning Districts to an 'HB' Zoning District.

STAFF REPORT
CASE NUMBER PZ-101716-3

I. PROJECT DESCRIPTION:

This is a request for Recommended Approval of a Rezoning from a 'B-2 and HB' Zoning Districts to an 'HB' Zoning District.

II. EXISTING SITE CONDITIONS:

The existing property at **150 Washington** is a property which contains 2 zoning districts and has been a vacant property. The petitioner requested the re-zoning to consolidate into one, the 'HB District' and to allow development of the property.

The subject property is approximately 0.71 Acres. There is an ALTA survey attached which shows the boundary limits and existing buildings and asphalt drive.

The existing building is a re-designated historic landmark in the City of Florissant.

III. SURROUNDING PROPERTIES:

The properties to the West are 100 Washington owned by the petitioner in the 'HB District' and 115 Rue St. Francois, which is zoned 'B-2 Central Business District'. The

property to the East is Zoned '~~B-3~~ HB' ~~Extensive Business District~~. The property to the East is also in both the'B-2 and HB' Zoning Districts. No residential props near.

IV. STAFF ANALYSIS:

An ALTA Survey by Marler Surveying Company, Inc. dated 9/29/16 was presented. The 160 foot zoning line falls in alignment with the South property line of the adjacent property.

Why do properties exist that fall into 2 zoning districts?
During the establishment of the Historic Business District, its boundaries were established as a grid in the ordinance, further described in the zoning code under section 405.160 with such language as this:

"*Area Boundaries And Zoning Districts Within Said Area. The "H" Historic Zoning District encompasses the area bounded by the centerline of the Coldwater Creek easement on the west, on the east by New Florissant Road, on the north by a line running parallel to and one hundred sixty (160) feet north of Rue St. Denis and on the south by a line running parallel to and one hundred sixty (160) feet south of Washington Street and continuing in a straight line to the centerline of Coldwater Creek.*"

This led to as many as 16 residential and commercial properties falling into both the 'B-2' Central Business District and the Historic Districts. The logical solution to this problem is to make corrections as land needs develop.

A check of the city Comprehensive Plan update 2004, indicates that the property should remain a commercial use.

VI. STAFF RECOMENDATIONS:

After analysis, P&Z can determine its support of the petition to re-zone the one property into one, the 'HB District'.

Suggested Motion 150 Washington – Re-zoning:

> I move to recommend approval for the Re-zoning of **150 Washington to the 'HB' Historic Business District**, subject to the conditions set forth below with these conditions being part of the record. ~~[illegible]~~

(End of report and suggested motion)

Site Development Plan
ALEXANDRIA'S CELLAR

PART OF BLOCK 38 OF THE OLD TOWN OF ST. FERDINAND
TOWNSHIP 47 NORTH, RANGE 6 EAST
CITY OF FLORISSANT, ST. LOUIS COUNTY, MISSOURI

PROPERTY DATA

OWNER	= QUALITY ASSURANCE GROUP LLC
SITE ADDRESS	= 150 WASHINGTON STREET FLORISSANT, MO 63031
LOC. NO.	= 08K620682
EXISTING ZONING	= B2–CENTRAL BUSINESS DISTRICT HB–HISTORICAL BUSINESS
PROPOSED ZONING	= HB–HISTORICAL BUSINESS
SITE AREA	= 31,198 s.f. OR 0.71± ACRES
SCHOOL DISTRICT	= FERGUSON–FLORISSANT
FIRE DISTRICT	= FLORISSANT VALLEY

GRAPHIC SCALE

(IN FEET)
1 inch = 20 ft.

SHEET INDEX

SDP–1	SITE DEVELOPMENT PLAN
1	FIRST FLOOR PLAN / 3D VIEW
	ALTA/NSPS LAND TITLE SURVEY

LOCATION MAP

LEGEND

EXISTING CONTOURS
PROPOSED CONTOURS
EXISTING STORM SEWER
PROPOSED STORM SEWER
EXISTING SANITARY SEWER
PROPOSED SANITARY SEWER
RIGHT–OF–WAY
EASEMENT
CENTERLINE
EXISTING TREE
EXISTING SPOT ELEVATION
PROPOSED SPOT ELEVATION
SWALE
TO BE REMOVED — T.B.R.
TO BE REMOVED & RELOCATED — T.B.R.& R.
TO BE USED IN PLACE — U.I.P.
ADJUST TO GRADE — A.T.G.
BACK OF CURB — B.C.
FACE OF CURB — F.C.
WATER MAIN
GAS MAIN
UNDERGROUND TELEPHONE
OVERHEAD WIRE
UNDERGROUND ELECTRIC
SILTATION CONTROL
FIRE HYDRANT
POWER POLE
WATER VALVE
LIGHT STANDARD

ABBREVIATIONS

N	NORTH
S	SOUTH
E	EAST
W	WEST
CONC	CONCRETE
ASPH	ASPHALT
PB	PLAT BOOK
DB	DEED BOOK
PG	PAGE
SF	SQUARE FEET
AC	ACRES
ELEV	ELEVATION
FF	FINISH FLOOR
FL	FLOWLINE
PVC	POLYVINYL CHLORIDE PIPE
RCP	REINFORCED CONCRETE PIPE
STM	STORM
SAN	SANITARY
(S)	SAVE
(R)	REMOVE
(T.B.R.)	TO BE REMOVED
(T.B.R.&R.)	TO BE REMOVED AND REPLACED
H.G.	HYDRAULIC GRADE

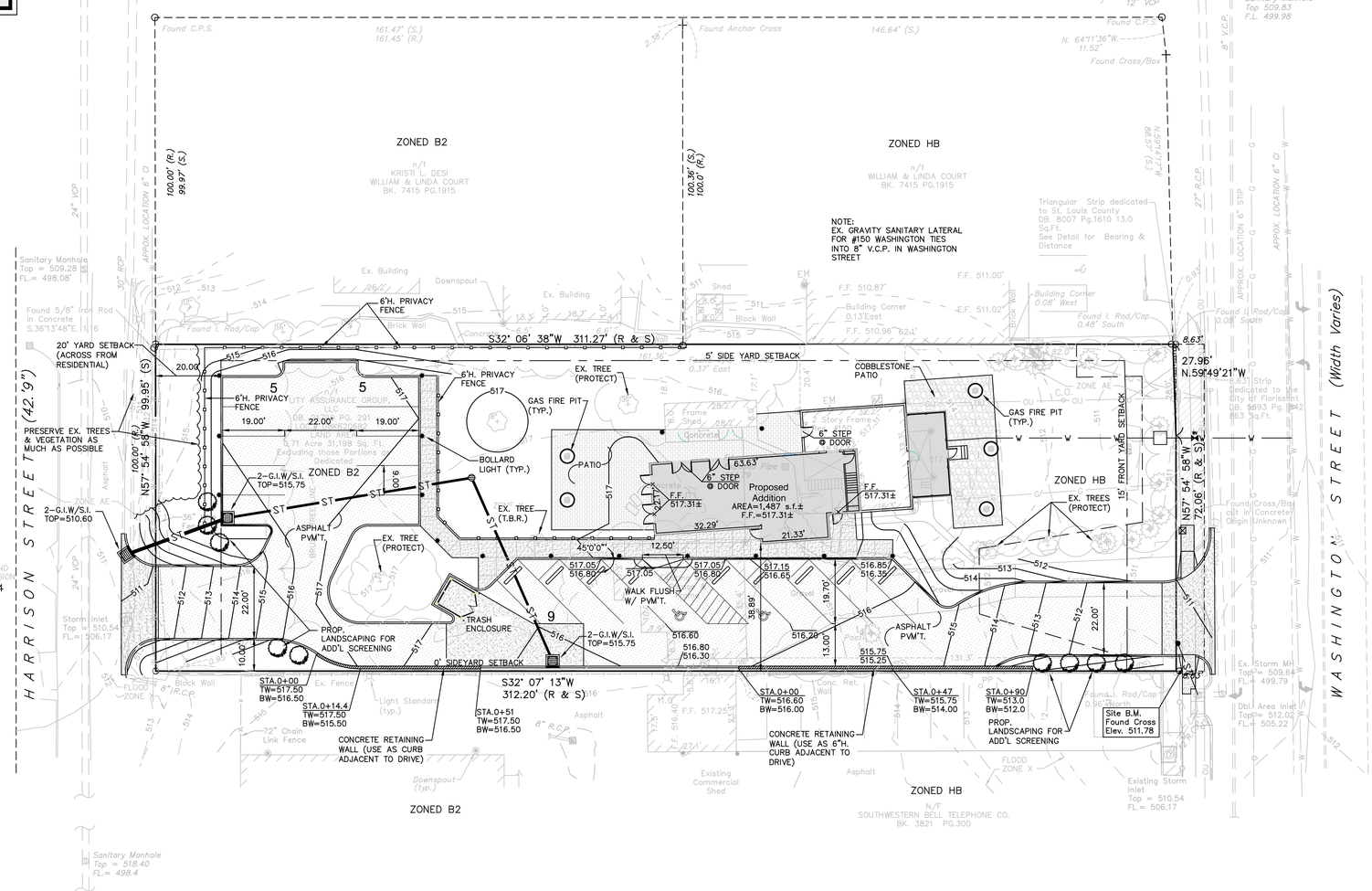

GENERAL NOTES

1.) ALL UTILITIES SHOWN HAVE BEEN LOCATED FROM AVAILABLE RECORDS. THEIR LOCATION SHOULD BE CONSIDERED APPROXIMATE. THE CONTRACTOR HAS THE RESPONSIBILITY TO NOTIFY ALL UTILITY COMPANIES, PRIOR TO CONSTRUCTION, TO HAVE EXISTING UTILITIES FIELD LOCATED. THE CONTRACTOR SHALL BE ON RECORD WITH THE MISSOURI ONE CALL SYSTEM. ALL PROPOSED UTILITIES SHALL BE UNDERGROUND.

2.) ALL ELEVATIONS ARE BASED ON BENCHMARK INFORMATION SHOWN.

3.) BOUNDARY AND TOPOGRAPHIC SURVEY BY MARLER SURVEYING COMPANY.

4.) ALL MATERIALS AND METHODS OF CONSTRUCTION TO MEET THE CURRENT STANDARDS AND SPECIFICATIONS OF THE CITY OF ST. FLORISSANT.

5.) ALL GRADED AREAS SHALL BE PROTECTED FROM EROSION BY EROSION CONTROL DEVICES AND/OR SEEDING AND MULCHING AS REQUIRED BY THE CITY OF FLORISSANT.

6.) GRADING CONTRACTOR SHALL INSTALL SILTATION CONTROL PRIOR TO STARTING THE GRADING. ADDITIONAL SILTATION CONTROL DEVICES SHALL BE INSTALLED AS DIRECTED BY THE CITY OF FLORISSANT.

7.) ALL FILLS AND BACKFILLS SHALL BE MADE OF SELECTED EARTH MATERIALS, FREE FROM BROKEN MASONRY, ROCK, FROZEN EARTH, RUBBISH, ORGANIC MATERIAL AND DEBRIS.

8.) GRADING CONTRACTOR SHALL KEEP EXISTING ROADWAYS CLEAN OF MUD AND DEBRIS AT ALL TIMES.

9.) PROPOSED CONTOURS SHOWN ARE FINISHED ELEVATIONS ON PAVED AREAS.

10.) ALL GRADING AND DRAINAGE TO BE IN CONFORMANCE WITH THE THE CITY OF FLORISSANT.

11.) SEEDING, SODDING, MULCHING AND PLANTINGS FOR ALL DISTURBED AREAS SHALL BE SPECIFIED ON THE LANDSCAPE PLAN.

12.) SIDEWALKS ALONG THE ACCESSIBLE ROUTE SHALL NOT HAVE A SLOPE EXCEEDING 1'V:20'H. SLOPES GREATER THAN 1'V:20'H MUST BE DESIGNED AS A RAMP. SIDEWALKS TO BE CONSTRUCTED TO ST. LOUIS COUNTY ADA STANDARDS.

13.) SIDEWALKS, CURB RAMPS, RAMPS AND ACCESSIBLE PARKING SPACES SHALL BE CONSTRUCTED IN ACCORDANCE WITH THE CURRENT APPROVED "AMERICANS WITH DISABILITIES ACT ACCESSIBILITY GUIDELINES" (ADAAG) ALONG WITH THE REQUIRED GRADES, CONSTRUCTION MATERIALS, SPECIFICATIONS AND SIGNAGE. IF ANY CONFLICT OCCURS BETWEEN THE ADAA GUIDELINES AND THE INFORMATION ON THE PLANS, THE ADAA GUIDELINES SHALL TAKE PRECEDENCE AND THE CONTRACTOR SHALL NOTIFY THE PROJECT ENGINEER PRIOR TO ANY CONSTRUCTION.

14.) NO GRADE SHALL EXCEED 3:1 SLOPE UNLESS APPROVED BY GEOTECHNICAL ENGINEER

15.) STORM WATER SHALL BE DISCHARGED AT AN ADEQUATE NATURAL DISCHARGE POINT. SINKHOLES ARE NOT ADEQUATE NATURAL DISCHARGE POINTS.

16.) ALL LANDSCAPED AREAS TO BE FILLED WITH A MINIMUM OF 6" OF TOPSOIL.

17.) ALL LANDSCAPED AREAS DISTURBED BY OFF–SITE WORK SHALL BE IMMEDIATELY SEEDED OR SODDED, AS DIRECTED BY THE CITY OF FLORISSANT UPON COMPLETION OF WORK IN THE AREA AFFECTED.

18.) ADEQUATE TEMPORARY OFF–STREET PARKING FOR CONSTRUCTION EMPLOYEES SHALL BE PROVIDED. PARKING ON NON–SURFACED AREAS SHALL BE PROHIBITED IN ORDER TO ELIMINATE THE CONDITION WHEREBY MUD FROM CONSTRUCTION AND EMPLOYEES' VEHICLES IS TRACKED ONTO THE PAVEMENT CAUSING HAZARDOUS ROADWAY AND DRIVEWAY CONDITIONS.

19.) SITE COVERAGE (TOTAL SITE AREA = 31,198 s.f. OR 0.71± AC.)

BUILDING AREA	= 2,527 s.f.	(8.10%)
PAVED AREA	= 15,035 s.f.	(48.19%)
GREEN AREA	= 13,636 s.f.	(43.71%)
	31,198 s.f.	100%

20.) BUILDING SETBACK REQUIREMENTS PER ZONING:
FRONT YARD = 15'
SIDE YARD = NONE REQ'D. BUT IF PROVIDED, 5'
REAR YARD = NONE REQ'D. BUT IF PROVIDED, 5'

21.) SITE LIGHTING SHALL COMPLY WITH THE CITY OF FLORISSANT ORDINANCE REQUIREMENTS. SITE LIGHTING SHALL CONSIST OF BOLLARD LIGHTING LOCATED AROUND PARKING LOT AND WALKING PATHS.

22.) LANDSCAPING SHALL COMPLY WITH THE CITY OF FLORISSANT ORDINANCE REQUIREMENTS.

23.) PARKING REQUIREMENTS
RESTAURANTS, BAR, COCKTAIL LOUNGE
1 SPACE FOR EVERY 3 SEATS PLUS 2 SPACES FOR EVERY 3 EMPLOYEES ON THE MAXIMUM SHIFT, OR 12.0 PER 1,000 GFA

A. NUMBER OF SEATS = 45 SEATS
SPACES REQ'D. = 45/3 = 15 SPACES

B. EMPLOYEES (MAX SHIFT) = 6
SPACES REQ'D. = 6/3 x 2 = 4 SPACES
TOTAL SPACES REQ'D. = 19 SPACES
TOTAL SPACES PROVIDED = 19 SPACES (INCLUDES 2 ADA SPACES)

SITE BENCHMARK

NAVD88 GEOID12B
ELEVATION 511.78
Found Cross at Northeast Side of
Site along Washington Street

FLOOD ZONE NOTES

By graphic plotting only, according to the Flood Insurance Rate Map Panel Number 29189C0062K and Community Number 290352 (City of Florissant) which bears an effective date of February 4, 2015. The property lies within the following zones:

"ZONE AE" Base Flood Elevations determined.

"FLOOD ZONE X" Areas of 0.2% annual chance flood; areas of 1% annual chance flood with average depths of less than 1 foot or with drainage areas less than 1 square mile; and areas protected by levees from 1% annual chance flood.

"ZONE X" Areas determined to be outside the 0.2% annual chance floodplain.

SPECIAL FLOOD HAZARD AREAS (SFHAS) SUBJECT TO INUNDATION BY THE 1% ANNUAL CHANCE FLOOD
The 1% annual chance flood (100–year flood), also known as the base flood, is the flood that has a 1% chance of being equaled or exceeded in any given year. The Special Flood Hazard Area is the area subject to flooding by the 1% annual chance flood. Areas of Special Flood Hazard include Zones A, AE, AH, AO, AR, A99, V, and VE. The Base Flood Elevation 15 the water–surface elevation of the 1% annual chance flood.

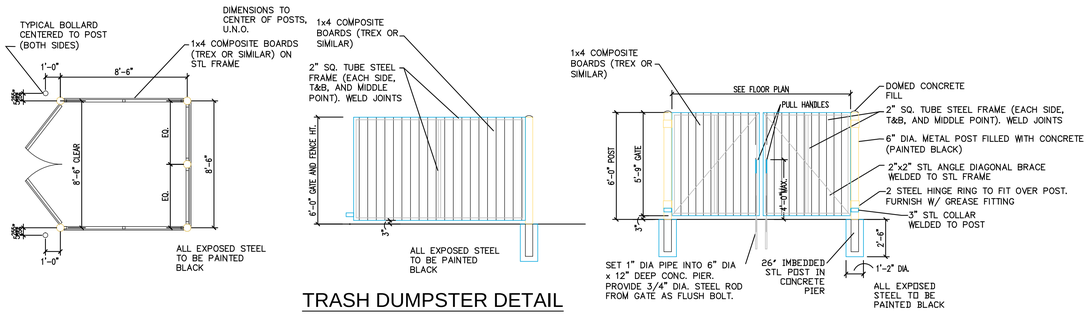

TRASH DUMPSTER DETAIL

PROPERTY DESCRIPTION

PART OF BLOCK 38 OF THE OLD TOWN (NOW CITY) OF ST. FERDINAND, IN ST. LOUIS COUNTY, STATE OF MISSOURI, TOWNSHIP 47 NORTH, RANGE 6 EAST, DESCRIBED AS FOLLOWS:

BEGINNING AT THE WESTERN MOST CORNER OF SOUTHWESTERN BELL TELEPHONE AS DESCRIBED IN BOOK 3821 PAGE 300 ON THE NORTHEAST LINE OF HARRISON (42.9' WIDE) STREET.

THENCE ALONG THE NORTHEAST LINE OF SAID HARRISON (42.9' WIDE) STREET NORTH 57 DEGREES 54 MINUTES 58 SECONDS WEST A DISTANCE OF 99.95 FEET;

THENCE DEPARTING SAID HARRISON (42.9' WIDE) STREET SOUTH 32 DEGREES 06 MINUTES 38 SECONDS WEST A DISTANCE OF 311.27 FEET TO THE SOUTHWEST LINE OF WASHINGTON STREET AS WIDENED;

THENCE ALONG SAID SOUTHWEST LINE OF WASHINGTON STREET AS WIDENED THE FOLLOWING COURSES AND DISTANCES:

SOUTH 59 DEGREES 49 MINUTES 21 SECONDS EAST A DISTANCE OF 27.96 FEET;

SOUTH 57 DEGREES 54 MINUTES 58 SECONDS WEST A DISTANCE OF 72.06 FEET TO THE NORTHWEST LINE OF THE AFORESAID SOUTHWESTERN BELL TELEPHONE;

THENCE ALONG SAID NORTHWEST LINE OF SOUTHWESTERN BELL TELEPHONE SOUTH 32 DEGREES 07 MINUTES 13 SECONDS WEST A DISTANCE OF 312.20 TO THE POINT OF BEGINNING AND CONTAINING 31,198 SQUARE FEET OR 0.71 ACRES, MORE OR LESS.

NOTE:
The underground utilities have been plotted from available sources and their locations must be considered approximate only. The verification of the actual locations of all underground utilities, either shown or not shown on this drawing, shall be the responsibility of the contractor and shall be located prior to grading or construction of improvements.

MISSOURI ONE CALL TICKET NUMBER 162180558 / 162180559

PREPARED FOR:
Quality Assurance Group LLC
100 WASHINGTON STREET
FLORISSANT, MISSOURI 63031
Office: 314–921–9498
CONTACT: JIMMIE AND TINA WHITE

PREPARED BY:
CEDC CIVIL ENGINEERING DESIGN CONSULTANTS
11402 Gravois Road
Suite 100
Saint Louis, Missouri 63126
314.729.1400
Fax: 314.729.1404
www.cedc.net

STATE OF MISSOURI — PAUL K. BOYER — NUMBER E-28258 — REGISTERED PROFESSIONAL ENGINEER
PAUL K. BOYER, P.E. E–28258
CIVIL ENGINEER
CEDC LICENSE NO.: 2003004674

CEDC CIVIL ENGINEERING DESIGN CONSULTANTS
11402 Gravois Road
Suite 100
Saint Louis, Missouri 63126
314.729.1400
Fax: 314.729.1404
www.cedc.net

Site Development Plan
Alexandria's Cellar
150 Washington Street
Florissant, Missouri 63031

Proj. # 1593

No.	Description	Date
	Submittal	10/03/16

Site Development Plan

DRAWING NO.

SDP-1

3D VIEW FROM SOUTHEAST

SCALE: NOT TO SCALE

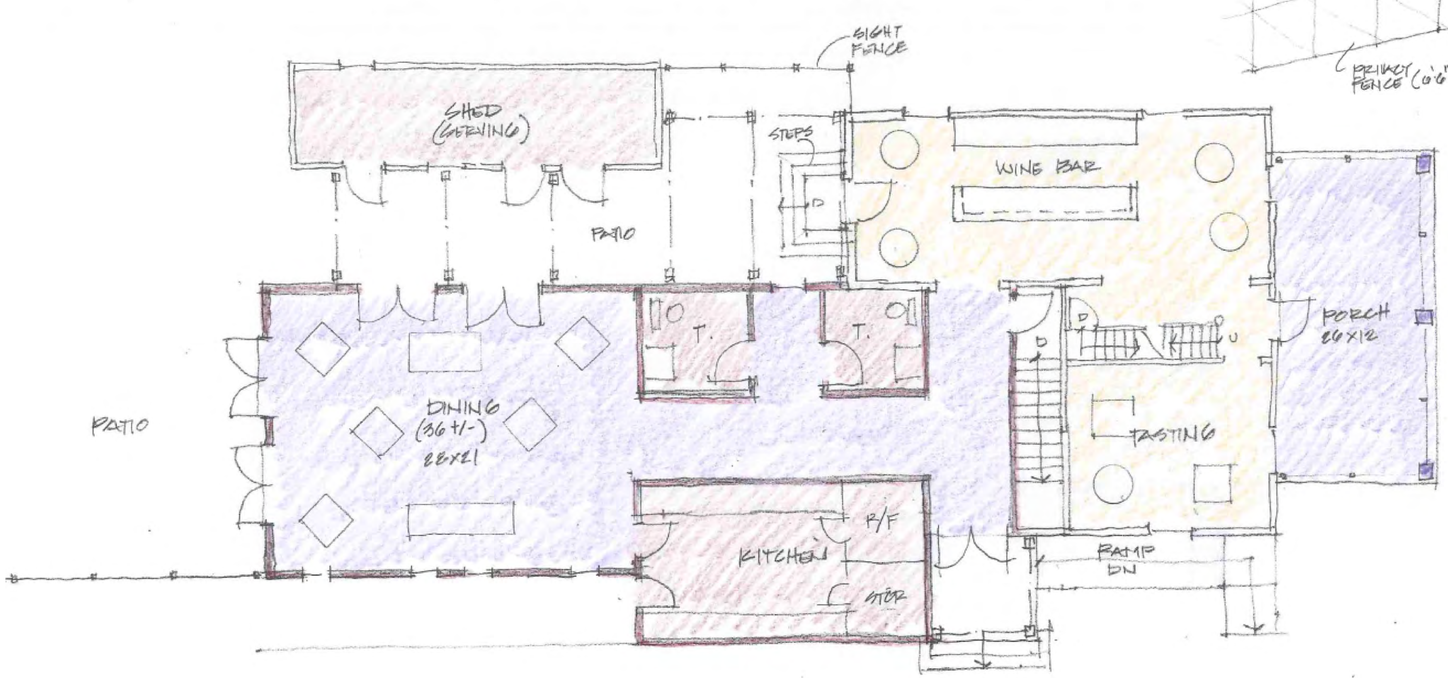

N

FIRST FLOOR PLAN

SCALE: 3/16"=1'-0"

0 10 20 40

saint louis DESIGN ALLIANCE architects

SAINT LOUIS DESIGN ALLIANCE

6014 DELMAR BLVD.
314.863.1313

SAINT LOUIS, MO 63112
www.stlda.com

ALEXANDRIA'S WINE CELLAR

150 WASHINGTON STREET, FLORISSANT, MO 63031

ALTA/NSPS LAND TITLE SURVEY

Part of Block 38 of the Old Town of St. Ferdinand

T47N, R6E
CITY OF FLORISSANT
ST. LOUIS COUNTY, MISSOURI

VICINITY MAP

NOT TO SCALE

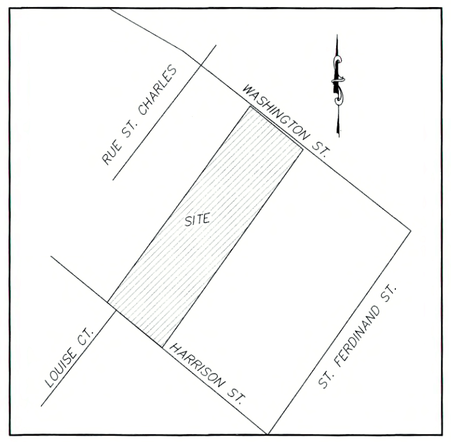

GENERAL NOTES

1. The basis of bearing of this survey is Grid North, NAD 83, Missouri East Zone.
2. The Property has an area of 31,198 square feet or .71 acres of land.
3. The property is designated by St. Louis County parcel # 08K620682
4. Source of deed reference is Deed Book 21790 Page 291.
5. This map complies with the Missouri Map Accuracy Standards, class III.
6. R.= Record and S. = Surveyed.

SCHEDULE "B" TITLE EXCEPTION NOTES

This survey is based on a title report prepared by Alliant National Title Group Commitment No. 544630, dated September, 2016 at 8:00 A.M. Items not listed below are standard exceptions and/or are not matters or issues that pertain to this survey.

SCHEDULE B PART II
Commitment Number: 544630 File Number: 544630
1. Schedule B of the policy or policies to be issued will contain exceptions to the following matters unless the same are disposed of to the satisfaction of the Company:
a. Defects, liens, encumbrances, adverse claims or other matters, if any, created, first appearing in the public records or attaching subsequent to the Effective Date but prior to the date the proposed insured acquires for value of record the estate or interest or mortgage thereon covered by this Commitment.
2. Standard Exceptions:
a. Rights or claims of parties in possession not shown by the public records.
b. Easements, or claims of easements, not shown by the public records.
c. Any encroachment, encumbrance, violation, variation, or adverse circumstance that would be disclosed by an accurate and complete land survey of the Land.
d. Any lien, or right to a lien, for services, labor or material heretofore or hereafter furnished, imposed by law and not shown by the public records.
e. Taxes or special assessments which are not shown as existing liens by the public records. Special Exceptions:
3. The lien of all taxes and assessments for the year 2015 and all subsequent years. TAXES FOR THE YEAR(S) 2014 ARE DELINQUENT.
4. City of Florissant General and Special taxes being examined.
5. Easement granted to/for St. Louis County as recorded in Book 8007 Page 1610 of the Saint Louis County Records.
6. Assessments by trustees of said subdivision as provided by the restrictions referenced above, if any.
7. Assessments for maintenance of sanitary sewer systems, if any.
8. We find no judgments against Anderson Properties II, LLC.
9. We find no judgments against Quality Assurance Group LLC.
10. The following figures are furnished for information purposes only: Locator # 08K620682
Assessed Valuation: 17,730 (14)
Rate: 9.8715
City of Florissant Rate NL
The following is being furnished for informational purposes only: Property Type: 1-4 Family (Residential)
Owners Policy Amount: $55,000.00
This commitment is invalid unless the Insuring Provisions and Schedules A and B are attached. 0042 ALTA Commitment (6/17/06)
Schedule A consists of 4 of 6 page (s)

SITE BENCHMARK

NAVD88 GEOID12B
ELEVATION 511.78
Found Cross at Northeast Side of Site along Washington Street

ZONING NOTES

Zoned: B2- Central Business District / HB-Historical Business as taken from The City Web-site. No further investigation is made. The Surveyor did not receive any further information from the client as specified in Item 6a of the Table "A" Specifications and Requirements

Existing site conditions may fall within permitted uses as listed in the City of St. Ferdinand / Florissant zoning regulations. Zoning regulations are subject to change, interpretation and exception, for further information contact the city of St. Ferdinand / Florissant planning and zoning department at (314) 839-7641

FLOOD ZONE NOTES

By graphic plotting only, according to the Flood Insurance Rate Map Panel Number 29189C0062K and Community Number 290352 (City of Florissant) which bears an effective date of February 4, 2015. The property lies within the following zones:

"ZONE AE" Base Flood Elevations determined.

"FLOOD ZONE X" Areas of 0.2% annual chance flood; areas of 1% annual chance flood with average depths of less than 1 foot or with drainage areas less than 1 square mile; and areas protected by levees from 1% annual chance flood.

"ZONE X" Areas determined to be outside the 0.2% annual chance floodplain.

SPECIAL FLOOD HAZARD AREAS (SFHAS) SUBJECT TO INUNDATION BY THE 1% ANNUAL CHANCE FLOOD
The 1% annual chance flood (100-year flood), also known as the base flood, is the flood that has a 1% chance of being equaled or exceeded in any given year. The Special Flood Hazard Area is the area subject to flooding by the 1% annual chance flood. Areas of Special Flood Hazard include Zones A, AE, AH, AO, AR, A99, V, and VE. The Base Flood Elevation is the water-surface elevation of the 1% annual chance flood.

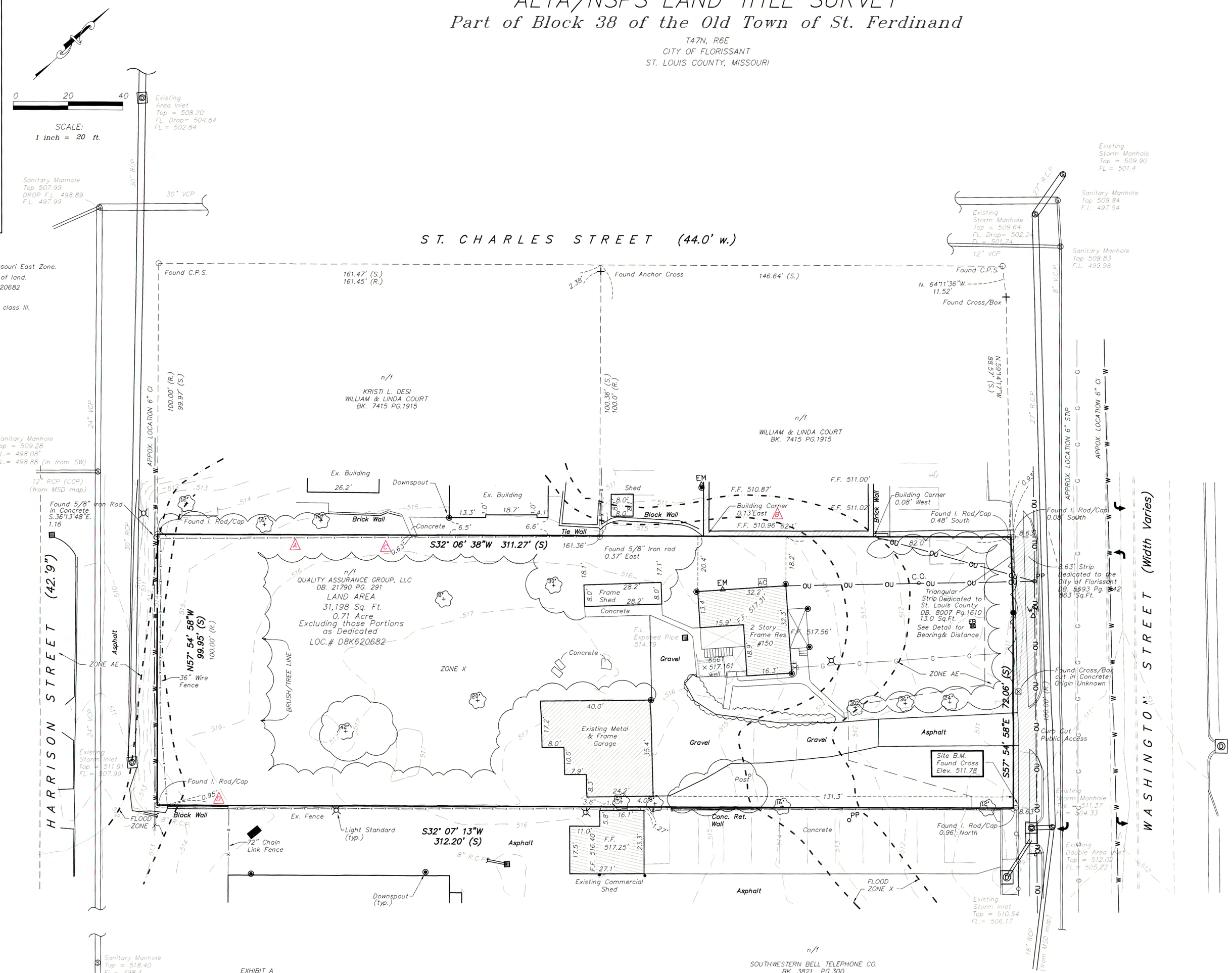

NOTES OF INTEREST

- A — Potential overlap of Real Property (Deeds)
- B — Adjoiner's Building Extends onto Subject Property
- C — Concrete Extends onto Subjects Property
- D — Existing Fence extends over Property Line

EXHIBIT A
Commitment Number: 544630 File Number: 544630
Legal Description:
Part of Block 38 of the Old Town (now city) of St. Ferdinand, in St. Louis County, State of Missouri, and described as follows: Beginning at a point in the Southwest line of Washington Street, 100 feet Southeast of the most Northern corner of said Block 38; thence Southwest and parallel with St. Charles Street, 320 feet 10 inches 10 point in the Northeast Line of Harrison Street, thence Southeast along the Northeast line of said Harrison Street, 100 feet to a point; thence Northeast and parallel to said St. Charles Street, 320 feet 10 inches to a point in the Southwest line of Washington Street, thence Northwest along the Southwest line of Washington Street; 100 feet to the point of beginning excepting therefrom that part dedicated to the City of Florissant by instrument recorded in Book 5693 Page 542 and further excepting therefrom that part thereof conveyed to St. Louis County, by instrument recorded in Book 8008 Page 1640 of the St. Louis County Records.

NOTE:

The underground utilities have been plotted from available sources and their locations must be considered approximate only. The verification of the actual locations of all underground utilities, either shown or not shown on this drawing, shall be the responsibility of the contractor and shall be located prior to grading or construction of improvements.

MISSOURI ONE CALL TICKET NUMBER 162180558 / 162180559

LEGEND

PP	UTILITY POLE
	GUY WIRE
	LIGHT STANDARD
	ELEC. YARD LIGHT
GM	GAS METER
	GAS VALVE
	FIRE HYDRANT
WM	WATER METER
	DOWNSPOUT
MH	MANHOLE
C.O.	CLEAN-OUT
	HANDICAP PARKING COUNT
	REGULAR PARKING SPACES
ITEM #10	REFLECT ITEM NUMBER ON SCHEDULE B II
(R. & S.)	RECORD and SURVEYED
D.B.	DEED BOOK
PG.	PAGE
N/F	NOW OR FORMERLY
—T—	TELEPHONE LINE
—G—	GAS LINE MARK
—E—	UNDERGROUND ELEC.
—OU—	OVERHEAD UTILITY
—W—	WATERLINE
	TREE WITH SIZE
WMH	WATER MANHOLE
WSV	WATER SHUTOFF VALVE
BH	BORE LOCATION

TABLE A

OPTIONAL SURVEY RESPONSIBILITIES AND SPECIFICATIONS
NOTE: The twenty (20) items of Table A may be negotiated between the surveyor and client. Any additional items negotiated between the surveyor and client shall be identified as 21(a), 21(b), etc. and explained pursuant to Section 6.D.ii.(g). Notwithstanding Table A Items 5 and 11, if an engineering design survey is desired as part of an ALTA/NSPS Land Title Survey, such services should be negotiated under Table A, Item 21.
if checked, the following optional items are to be included in the ALTA/NSPS LAND TITLE SURVEY, except as otherwise qualified (see note above):

1. _X_ Monuments placed (or a reference monument or witness to the corner) at all major corners of the boundary of the property, unless already marked or referenced by existing monuments or witnesses in close proximity to the corner.
2. _X_ Address(es) of the surveyed property if disclosed in documents provided to or obtained by the surveyor, or observed while conducting the fieldwork.
3. _X_ Flood zone classification (with proper annotation based on Federal Flood Insurance Rate Maps or the state or local equivalent) depicted by scaled map location and graphic plotting only.
4. _X_ Gross land area (and other areas if specified by the client).
5. _X_ Vertical relief with the source of information (e.g., ground survey, aerial map), contour interval, datum, and originating benchmark identified.
6. _X_ (a) If set forth in a zoning report or letter provided to the surveyor by the client, list the current zoning classification, setback requirements, the height and floor space area restrictions, and parking requirements. Identify the date and source of the report or letter.
____ (b) If the zoning setback requirements are set forth in a zoning report or letter provided to the surveyor by the client, and if those requirements do not require an interpretation by the surveyor, graphically depict the building setback requirements. identify the date and source of the report or letter.
7. _X_ (a) Exterior dimensions of all buildings at ground level.
(b) Square footage of.
____ (1) exterior footprint of all buildings at ground level.
____ (2) other areas as specified by the client.
_X_ (c) Measured height of all buildings above grade at a location specified by the client. If no location is specified, the point of measurement shall be identified.
8. _X_ Substantial features observed in the process of conducting the fieldwork (in addition to the improvements and features required pursuant to Section 5 above) (e.g., parking lots, billboards, signs, swimming pools, landscaped areas, substantial areas of refuse).
9. _X_ Number and type (e.g., disabled, motorcycle, regular and other marked specialized types) of clearly identifiable parking spaces on surface parking areas, lots and in parking structures. Striping of clearly identifiable parking spaces on surface parking areas and lots.
10. ____ (a) As designated by the client, a determination of the relationship and location of certain division or party walls with respect to adjoining properties (client to obtain necessary permissions).
____ (b) As designated by the client, a determination of whether certain walls are plumb (client to obtain necessary permissions).
11. _X_ Location of utilities existing on or serving the surveyed property as determined by:
• observed evidence collected pursuant to Section 5. E. iv.
• evidence from plans requested by the surveyor and obtained from utility companies, or provided by client (with reference as to the sources of information), and
• markings requested by the surveyor pursuant to an 811 utility locate or similar request
Representative examples of such utilities include, but are not limited to:
Manholes, catch basins, valve vaults and other surface indications of subterranean uses;
Wires and cables (including their function, if readily identifiable) crossing the surveyed property, an all poles on or within ten feet of the surveyed property. Without expressing a legal opinion as to the ownership or nature of the potential encroachment, the dimensions of all encroaching utility pole crossmembers or overhangs; and
Utility company installations on the surveyed property.
Note to the client, insurer, and lender – With regard to Table A, item 11, source information from plans and markings will be combined with observed evidence of utilities pursuant to Section 5.E.iv. to develop a view of the underground utilities. However, lacking excavation, the exact location of underground features cannot be accurately, completely, and reliably depicted. In addition, in some jurisdictions, 811 or other similar utility locate requests from surveyors may be ignored or result in an incomplete response, in which case the surveyor shall note on the plat or map how this affected the surveyor's assessment of the location of the utilities. Where additional or more detailed information is required, the client is advised that excavation and/or a private utility locate request may be necessary.
12. _X_ As specified by the client, Governmental Agency survey-related requirements (e.g., HUD surveys, surveys for leases on Bureau of Land Management managed lands).
13. _X_ Names of adjoining owners according to current tax records. If more than one owner, identify the first owner's name listed in the tax records followed by et al."
14. ____ As specified by the client, distance to the nearest intersecting street.
15. ____ Rectified orthophotography, photogrammetric mapping, remote sensing, airborne/mobile laser scanning and other similar products, tools or technologies as the basis for the showing the location of certain features (excluding boundaries) where ground measurements are not otherwise necessary to locate those features to an appropriate and acceptable accuracy relative to a nearby boundary. The surveyor shall (a) discuss the ramifications of such methodologies (e.g., the potential precision and completeness of the data gathered thereby) with the insurer, lender, and client prior to the performance of the survey, and (b) place a note on the face of the survey explaining the source, date, precision, and other relevant qualifications of any such data.
16. _X_ Evidence of recent earth moving work, building construction, or building additions observed in the process of conducting the fieldwork.
17. _X_ Proposed changes in street right of way lines, if such information is made available to the surveyor by the controlling jurisdiction. Evidence of recent street or sidewalk construction or repairs observed in the process of conducting the fieldwork.
18. ____ If there has been a field delineation of wetlands conducted by a qualified specialist hired by the client, the surveyor shall locate any delineation markers observed in the process of conducting the fieldwork and show them on the face of the plat or map. If no markers were observed, the surveyor shall so state.
19. ____ Include any plottable offsite (i.e., appurtenant) easements or servitudes disclosed in documents provided to or obtained by the surveyor as a part of the survey pursuant to Sections 5 and 6 (and applicable selected Table A items) (client to obtain necessary permissions).
20. _X_ Professional Liability Insurance policy obtained by the surveyor in the minimum amount of $_____ to be in effect throughout the contract term. Certificate of Insurance to be furnished upon request, but this item shall not be addressed on the face of the plat or map.
21. _X_ Plot Easements.

Adopted by the Board of Governors, American Land Title Association, on October 8, 2015. American Land Title Association, 1800 M St., N. W., Suite 300S, Washington, D. C. 20036-5828. www.alta.org
Adopted by the Board of Directors, National Society of Professional Surveyors, on October 9, 2015. National Society of Professional Surveyors, Inc., 5119 Pegasus Court, Suite Q, Frederick, MD 21704 http://www.nsps.us.com/

ALTA/NSPS LAND TITLE SURVEY

150 WASHINGTON STREET
CITY OF FLORISSANT,
ST. LOUIS COUNTY, MISSOURI

To INVESTORS TITLE COMPANY & ALLIANT NATIONAL TITLE COMPANY:

This is to certify that this map or plat and the survey on which it is based were made in accordance with the 2016 Minimum Standards Detail Requirements for ALTA/NSPS Land Title Surveys, jointly established and adopted by ALTA and NSPS, and includes items 1, 2, 3, 4, 5, 6(a), 7(a), 7(c), 8, 9, 11, 12, 13, 16, 17, 20, and 21 of Table A thereof. The field work was completed on 09/24/2016.

Date of map or plat 09/15/2016

MARLER SURVEYING COMPANY INC.
MISSOURI CORP. NO. L.S. -347-D
MARTY L. MARLER
MISSOURI PLS# 2801 9-29-16

copyright 2016 by Marler Surveying Company, INC.

PROJECT NAME: 150 WASHINGTON ST.	PROJECT No.: 1608-029
ADDRESS: 150 WASHINGTON STREET	ST. LOUIS COUNTY, MISSOURI

DATE: 09/15/2016	REVISION DATES
SCALE: 1" = 20'	09/27/2016
DRAWN BY: M.M.	09/29/2016
CHECKED BY: M.L.M.	
DWG. No.: 1608-029	
DEPUTY: S.F.	

MARLER SURVEYING COMPANY, INC.
11402 GRAVOIS RD., STE. 200 ST. LOUIS, MO 63126 (314) 729-1001 PH. (314) 729-1044 FAX
402 EAST SPRINGFIELD ROAD, SULLIVAN, MO (573) 468-4684 PH. (573) 860-8606 FAX
email: marler@marlersurveying.net

INTRODUCED BY COUNCIL AS A WHOLE
NOVEMBER 14, 2016

BILL NO. 9238 ORDINANCE NO.

AN ORDINANCE AMENDING SECTION 125.065.A "JOB CLASSIFICATION AND GRADE LEVEL" BY AMENDING THE GRADE LEVEL FOR SELECTED JOB CLASSIFICATIONS AND BY ADDING JOB CLASSIFICATIONS.

NOW, THEREFORE, BE IT ORDAINED BY THE COUNCIL OF THE CITY OF FLORISSANT, ST. LOUIS COUNTY, MISSOURI, AS FOLLOWS:

Section 1: That Chapter 125.065 "Wage Increase and Schedule," subsection A "Job Classification And Grade Level," is hereby amended by deleting the following job classification as so indicated:

Job Classification	Grade Level
Golf Club House Manager	3

Section 2: That Chapter 125.065 "Wage Increase and Schedule," subsection A "Job Classification And Grade Level," is hereby amended by adding the following job classifications as so indicated:

Job Classification	Grade Level
Golf Club House Manager	4

Section 3: This ordinance shall become in force and effect upon its passage and approval as provided by law.

Adopted this _____ day of _____, 2016.

_____
Jackie Pagano
President of the Council
City of Florissant

Approved this _____ day of _____, 2016.

_____
Thomas P. Schneider
Mayor, City of Florissant

ATTEST:

_____
Karen Goodwin, MMC/MRCC
City Clerk

INTRODUCED BY COUNCIL AS A WHOLE
NOVEMBER 14, 2016

BILL NO. 9239 ORDINANCE NO.

AN ORDINANCE ADOPTING THE BUDGET FOR THE CITY OF FLORISSANT FOR THE FISCAL YEAR COMMENCING ON DECEMBER 1, 2016 AND ENDING ON NOVEMBER 30, 2017 AND PROVIDING FOR ITS EFFECTIVE DATE.

NOW, THEREFORE, BE IT ORDAINED BY THE COUNCIL OF THE CITY OF FLORISSANT, ST. LOUIS COUNTY, MISSOURI, AS FOLLOWS:

Section 1: The Budget for the City of Florissant commencing on December 1, 2016 and ending November 30, 2017, a copy of which is attached hereto and by this reference incorporated herein and made a part hereof, is hereby adopted and approved.

Section 2: This ordinance shall become in force and effect as of December 1, 2016.

Adopted this _____ day of _____, 2016.

_____
Jackie Pagano
President of the Council
City of Florissant

Approved this _____ day of _____, 2016.

_____
Thomas P. Schneider
Mayor, City of Florissant

ATTEST:

_____
Karen Goodwin, MMC/MRCC
City Clerk

City of Florissant, Missouri
Adopted Budget
2017

955 rue St. Francois
Florissant, Missouri 63031
314-921-5700
www.florissantmo.com

FUND SUMMARIES

	Page	Actual 2015	Budget 2016	Proposed 2017	Adopted 2017
General Fund - 01					
Revenues	2	23,289,024	23,079,300	22,733,300	22,733,300
Expenditures					
Information Technology	4	208,516	397,118	380,563	380,563
Housing Resource Center	7	80,081	44,639	60,302	60,302
Legislative	9	158,843	156,535	156,535	160,535
Senior Services	11	165,205	198,017	198,285	198,285
Administrative	15	2,850,059	3,120,556	3,045,395	3,043,351
Municipal Court	20	653,725	710,266	646,839	646,839
Health	22	772,635	906,619	911,839	927,530
Recreation-Theater	26	340,256	365,344	424,791	441,291
Recreation-Centers	29	1,749,359	1,963,835	1,981,793	1,974,434
Recreation-Playground	32	131,244	151,951	151,951	151,951
Recreation-Bangert	34	159,904	185,389	195,498	195,498
Recreation-Koch Aquatic	34	308,545	251,808	251,949	251,949
Recreation-Parks	37	526,626	625,831	486,132	496,906
Recreation-Golf Course	39	906,533	803,407	831,343	847,196
Public Works	43	4,208,630	4,527,814	3,965,532	3,906,251
Police	48	10,702,435	10,905,648	11,075,172	11,075,172
Media	66	191,914	215,064	212,983	205,179
Total General Fund Expenditures		24,114,510	25,529,841	24,976,902	24,963,232
Capital Improvement Fund - 03	68	3,254,831	3,941,428	4,844,148	4,949,448
Park Improvement Fund - 09	76	3,376,012	3,341,287	4,037,187	4,282,245
Street Fund - 08	88	0	0	1,700,000	1,700,000
Sewer Lateral Fund - 04	90	758,067	700,683	671,450	671,450
Property Revitalization Fund - 10	93	125,616	30,000	30,000	30,000
Court Building Fund - 14	95	1,167,049	252,000	132,000	132,000
Total - All Funds		32,796,085	33,795,239	36,391,687	36,728,375
Expenditure Forecast	97	Estimate of future expenditures and personnel.			

01 - GENERAL FUND - REVENUES

	Actual 2015	Budget 2016	Proposed 2017	Adopted 2017
TAXES				
Cigarette	144,467	125,000	145,000	145,000
Gasoline	1,617,398	1,550,000	1,625,000	1,625,000
Road & Bridge Taxes	553,983	550,000	550,000	550,000
Sales Tax	8,025,641	7,800,000	8,100,000	8,100,000
Utility Tax	6,202,723	6,000,000	5,800,000	5,800,000
Total Taxes	16,544,212	16,025,000	16,220,000	16,220,000
LICENSES				
Business	750,323	800,000	1,100,000	1,100,000
Liquor & Other Licenses	51,188	50,000	50,000	50,000
Total Licenses	801,511	850,000	1,150,000	1,150,000
PERMITS				
Building	255,304	250,000	250,000	250,000
Minimum Housing	245,566	230,000	240,000	240,000
Signs & Other Permits	39,725	40,000	40,000	40,000
Total Permits	540,595	520,000	530,000	530,000
RECREATION				
Green Fees	170,222	200,000	230,000	230,000
Cart Fees	170,644	220,000	190,000	190,000
Pro Shop Sales	32,765	30,000	45,000	45,000
Concession Sales and Fees	85,538	90,000	100,000	100,000
Other Miscellaneous	20,932	10,000	10,000	10,000
Total Golf	480,101	550,000	575,000	575,000

01 - GENERAL FUND - REVENUES

	Actual 2015	Budget 2016	Proposed 2017	Adopted 2017
RECREATION (CONTINUED)				
Nature Lodge	17,700	0	0	0
Rentals-Nature Lodge/Gym	0	25,000	25,000	25,000
Classes	89,834	0	0	0
Center Activity	0	284,500	300,000	300,000
Gym Rental	10,435	0	0	0
Rink	55,913	60,000	60,000	60,000
Outdoor Pool Receipts	0	175,000	130,000	130,000
Swimming Pool-J.J.E.	93,464	0	0	0
Swimming Pool-Bangert	55,171	0	0	0
Swimming Pool-Koch	93,745	0	0	0
Miscellaneous J.J.E.	269,910	180,500	160,000	160,000
Playground Program	66,764	87,300	87,300	87,300
Theater	110,980	120,000	160,000	160,000
Concession Sales	69,845	70,000	70,000	70,000
Total Recreation	933,761	1,002,300	992,300	992,300
Total Golf & Recreation	1,413,862	1,552,300	1,567,300	1,567,300
MISCELLANEOUS				
Interest Income	9,931	10,000	60,000	60,000
Municipal Court	1,956,197	2,250,000	1,400,000	1,400,000
Other Miscellaneous	958,763	847,000	724,000	724,000
Cable TV	757,561	750,000	725,000	725,000
Senior Citizen Luncheon	26,920	25,000	25,000	25,000
Grants & Reimbursement	279,472	250,000	332,000	332,000
Total Miscellaneous	3,988,844	4,132,000	3,266,000	3,266,000
Total Budgeted Revenue	23,289,024	23,079,300	22,733,300	22,733,300
Less Total Budgeted Expenditure			(24,976,902)	(24,963,232)
Equal Revenue Over/(Under) Expenditure			(2,243,602)	(2,229,932)
Plus Estimated Beginning Fund Balance			6,698,274	6,698,274
Equal Estimated Ending Fund Balance			4,454,672	4,468,342

INFORMATION TECHNOLOGY DEPARTMENT

Account	Actual 2015	Budget 2016	Proposed 2017	Adopted 2017
3610-Salaries	90,638	92,321	94,116	94,116
3613-Employees' Benefits	39,472	40,797	42,247	42,247
3621-Uniforms	0	300	300	300
3624-Telephone	0	165,000	140,000	140,000
3632-Office Supplies & Maint.	15,402	13,800	17,000	17,000
3633-Materials & Supplies	6,773	10,200	11,500	11,500
3642-Dues, Travel, Training	795	4,700	5,200	5,200
3650-Professional Services	55,436	70,000	70,200	70,200
Total	208,516	397,118	380,563	380,563

PERSONNEL SERVICES

Full-time	92,321	94,116	94,116
Part-time	0	0	0
Overtime	0	0	0
Total Personnel Services	92,321	94,116	94,116

PERSONNEL SCHEDULE

IT Manager	1.00
IT System Support Technician	1.00
Total	2.00

Full-time 2.00

Total Personnel 2.00 Full-time Equivalent (Part-time) 0.00

Information Technology Department Budget: 2017

		2016	2017
Account 3610 - Salaries			
Full-time Employees			
Information Technology Manager		1	1
IT System Support Technician		1	1
	Total full-time employees	2	2
Account 3621 - Uniforms		300	300
City logo/Uniform shirts for IT Department		300	300
Account 3624 - Telephone	Total	165,000	140,000
Telephone service for all City facilities including both local and long distance calling and mobile tablet devices		85,000	60,000
Lease and maintenance costs for the City's Inter-Tel telephone system		38,000	38,000
Cellular telephone service		32,000	32,000
Purchase of IP phones		10,000	10,000
Account 3632 - Office Supplies	Total	13,800	17,000
Miscellaneous Office Supplies and Software		2,500	2,500
Software Renewal:			
Anti-Virus Protection		2,400	2,400
Jatheon Email Mail Archiving		2,500	2,500
Baracuda Web Filter		1,200	1,200
Baracuda Spam Filter		1,200	1,200
Malwarebytes		0	3,200
E-Gov Website/Citizen Resource Management Support		4,000	4,000
Account 3633 - Materials & Supplies	Total	10,200	11,500
Equipment Repair		7,000	7,000
Yearly Maintenance and Repair for Security Cameras at City Hall and Government Building		3,200	4,500
Account 3642 - Dues, Travel & Training	Total	4,700	5,200
Mileage		600	600
Training		2,000	2,500
GMIS International conference		2,000	2,000
Dues - GMIS International		100	100

Information Technology Department Budget: 2017

		2016	2017
Account 3650 - Professional Services	Total	70,000	70,200
Internet Access		3,500	3,500
Local Area Network- Charter Communications fiber optic connectivity at $5,250 per month.		63,000	63,000
Outside Consultant		2,000	2,500
Backup to Cloud ($100 per month)		0	1,200
Network Security Audit		1,500	0

Account 0361 - Capital Additions	Total	41,000	39,000
Replace computers, laptops, tablets and monitors in various departments. Approximately 30 devices on 4 year replacement cycle @ 600.00 each plus monitors as needed			20,000
Replace two network switches purchased in 2008			9,000
Implement Offsite backup solution			10,000
Prior year capital additions		41,000	0

HOUSING RESOURCE CENTER DEPARTMENT

Account	Actual 2015	Budget 2016	Proposed 2017	Adopted 2017
3710-Salaries	52,573	30,274	44,450	44,450
3713-Employees' Benefits	24,712	11,915	13,402	13,402
3721-Uniforms	448	450	450	450
3732-Office Supplies & Maint.	976	1,000	1,000	1,000
3742-Dues, Travel, Training	1,372	1,000	1,000	1,000
Total	80,081	44,639	60,302	60,302

PERSONNEL SERVICES

Full-time	21,060	21,469	21,469
Part-time	9,214	22,981	22,981
Overtime	0	0	0
Total Personnel Services	30,274	44,450	44,450

PERSONNEL SCHEDULE

Administrative Assistant*	0.50
Community Development Specialist p/t*	0.36
Volunteer Coordinator p/t	0.48
Total	1.34

Full-time 0.50

Total Personnel 1.34 Full-time Equivalent (Part-time) 0.84

*50% of the wages and benefits for the full-time Administrative Assistant and the part-time Community Development Specialist are paid out of Community Development Block Grant Funds.

Housing Resource Center Department Budget: 2017

		2016	2017
Account 3710 - Salaries			
Full-time Employees			
Administrative Assistant - wage split with Community Development Fund		0.5	0.5
Total full-time employees		0.5	0.5
Part-time Employees			
Community Development Specialist: 1 each x 52 weeks x 29 hours per week = 1,508 hours (50% of wage paid by Community Development Fund)		0.4	0.4
Volunteer Coordinator: 1 each x 1,000 hours		0.0	0.5
Total part-time employees		0.4	0.9
Account 3721 - Uniforms	Total	450	450
Uniform shirts for Housing Center employees		450	450
Account 3732 - Office Supplies	Total	1,000	1,000
Miscellaneous office supplies		1,000	1,000
Account 3742 - Dues, Travel & Training	Total	1,000	1,000
Mileage reimbursement		1,000	1,000

LEGISLATIVE DEPARTMENT

Account	Actual 2015	Budget 2016	Proposed 2017	Adopted 2017
3810-Salaries	105,612	105,612	105,612	105,612
3813-Legislative Benefits	28,146	23,923	23,923	23,923
3842-Dues, Travel, Training	25,085	27,000	27,000	31,000
Total	158,843	156,535	156,535	160,535

PERSONNEL SERVICES

Full-time	0	0	0
Part-time	105,612	105,612	105,612
Overtime	0	0	0
Total Personnel Services	105,612	105,612	105,612

PERSONNEL SCHEDULE

Councilmember's	9.00		
Total	9.00	Full-time	0.00
		Full-time Equivalent (Part-time)	0.00
Total Personnel	9.00	Elected Officials	9.00

Legislative Department Budget: 2017

		2016	2017
Account 3810 - Salaries			
Elected Officials			
Council members		9	9
Account 3842 - Dues, Travel & Training	Total	27,000	31,000
Mailings, news letters, printing, business cards, seminars, conferences, meetings, mileage, city logo jackets and shirts, and other miscellaneous items.		27,000	27,000
Citywide ward picnics		0	4,000

SENIOR SERVICES DEPARTMENT

Account	Actual 2015	Budget 2016	Proposed 2017	Adopted 2017
3910-Salaries	87,675	94,832	96,321	96,321
3913-Employees' Benefits	37,667	38,385	39,764	39,764
3921-Uniforms	123	200	200	200
3926-Utilities	4,172	6,600	6,600	6,600
3929-Bldg., Maint. & Supply	5,953	9,500	7,500	7,500
3932-Office Supplies & Maint.	1,683	2,700	2,200	2,200
3942-Dues, Travel & Training	334	500	500	500
3950-Professional Services	8,849	15,200	14,900	14,900
3951-Senior Citizen Lunches	18,749	28,600	28,800	28,800
3954-Publicity	0	1,500	1,500	1,500
Total	165,205	198,017	198,285	198,285

PERSONNEL SERVICES

Full-time	76,045	77,520	77,520
Part-time	18,787	18,801	18,801
Overtime	0	0	0
Total Personnel Services	94,832	96,321	96,321

PERSONNEL SCHEDULE

Senior Citizen Coordinator	1.00
Clerk Typist	1.00
Total	2.00

Dining Center	
Support Staff p/t	0.68
Custodian p/t	0.25
Total	0.93

Full-time	2.00
Full-time Equivalent (Part-time)	0.93
Total Personnel	2.93

Senior Services Department Proposed Budget: 2017		2016	2017
Account 3910 - Salaries			
Full-time Employees			
Senior Citizen Coordinator		1	1
Clerk Typist		1	1
Total full-time employees		2	2
Part-time Employees			
Part-Time Senior Office Support 2 x 12.5 hrs/week x 52 weeks	hours	1,300	1,300
Part-Time Senior Office Support: trips, 2 x 10 trips x 6 hours per trip	hours	120	120
Custodian: 1 x 10 hrs/week x 52 weeks	hours	520	520
Total part-time hours		1,940	1,940
Account 3921 - Uniforms	Total	200	200
Uniform shirts for Dining Center Employees		200	200
Account 3926 - Utilities	Total	6,600	6,600
Sewer		900	900
Ameren		2,400	2,400
Water		260	260
Laclede Gas		2,500	2,500
Trash		540	540
Account 3929 - Building, Maintenance & Supplies	Total	9,500	7,500
Pest Control ($600) & Termite Protections ($100) at Dining Center		700	700
Door Replacement at the Dining Center		2,500	0
Microphone/Speaker for Dining Center		0	500
Regular Maintenance - Dining Center		1,500	1,500
Janitorial Supplies for Dining Center - cleaning supplies, batteries, air freshener refills, trash bags, light bulbs, etc.		700	700
Catering Supplies - Serving utensils, plates, trays, napkins, etc.		2,300	2,300
Food Purchases for Dining Center - birthday cakes, diabetic desserts, tea, coffee, lemon juice, sugar, creamer, etc.		750	750
Serving Equipment for Dining Center - tea dispenser, coffee pot, sterno, serving cart, microwave.		300	300
Mat and mat cleaning for lobby and kitchen		550	550
Decorations and Entertainment for Dining Center		200	200
Account 3932 - Office Supplies & Maintenance	Total	2,700	2,200
Golden Age Booklets		500	0
Office Supplies ($700), film development ($200), & computer supplies ($500)		1,400	1,400
North County Gala Expenses		100	100
Paper supplies - New Years Eve brochures, tickets, special paper for events, flyers for parties, dances, etc.		700	700

Senior Services Department Proposed Budget: 2017		2016	2017
Account 3942 - Dues, Travel, Training	Total	500	500
Mileage - in town		500	500
Account 3950 - Professional Services	Total	15,200	14,900
Speakers & Program Expenses		600	600
Trips & Tours		14,600	14,000
Appreciation lunch for volunteer Tax Preparers		0	250
Appreciation donation to Sprig & Twig Garden Club for Dining Center Plant Maintenance		0	50
Account 3951 - Senior Citizen Lunches	Total	28,600	28,800
Approximately 24 meals a day x $5.00 per meal = $120.00 a day. 240 days at Dining Center x $120.00 per day = $28,800		28,600	28,800
Account 3954 - Publicity	Total	1,500	1,500
Senior citizen events and activities to be printed in the City of Florissant Parks and Recreation Guide		1,500	1,500

SENIOR CITIZEN PROPOSED 2017 BUDGET
EXPLANATION OF FUNDING

Acct 3951 Senior Citizen Lunches: The majority of the funds requested in this account are reimbursed in Revenue Acct #3480 as diners pay the full cost of their lunch. The meals that are not covered include certain cancellations & comped lunches for entertainers, certain speaking guests and employees at Holiday Parties.

Senior Citizen Events and Programs: Funding is provided through the cooperation of the City of Florissant Senior Citizen Budget, the Florissant Senior Citizen Commission and the Florissant Silver Words Club. Also, to defray the costs of some of the events, the Senior Office solicits donations and attendance prizes from local businesses. Listed below is the explanation of the 3 types of funding in the Senior Citizen Department.

A. CITY OF FLORISSANT SENIOR CITIZEN BUDGET

Acct 3950 Professional Services **TOTAL $14,900**

***Trips & Tours**: The funds in this account are reimbursed in Revenue Acct #3481 as guests pay the ticket price for the trip/tour.

2017 Trips include:

1. February – *Touhill Performance of "In the Mood" and Lunch*		
Touhill tickets $32, lunch $22, bus $6, staff $2	TOTAL: $62 per person	$3,100
2. May – *Rock N Roll Mystery Trip*		
Tour: N/C, lunch $25, Bus $6, staff $1	TOTAL: $32 per person	$1,600
3. July – *Fairmount Racetrack*		
Racetrack admittance & lunch $16, Bus $6, staff $1	TOTAL: $23 per person	$1,150
4. September – *Riverboat Cruise*		
Cruise $45, bus $6, staff $2	TOTAL: $53 per person	$2,650
5. October – *Halloween Trip*		
Museums $10, lunch $23, bus $6, staff $2	TOTAL: $41 per person	$2,050
6. December – *TBA*		
Theatre Production $40, lunch $21, bus $6, staff $2	TOTAL: $69 per person	$3,450

Subtotal: Trips & Tours $14,000

***Speakers & Program Expenses**: Speakers or Programs (Quilt Show, Historians, Entertainers, etc.)

Subtotal: Speakers & Programs $600

***Appreciation:** Appreciation donation to Sprig & Twig Garden Club for the landscaping at the Dining Center ($50) and appreciation pizza luncheon for Tax Preparers ($250)

Subtotal: Appreciation $300

B. SENIOR COMMISSION FUNDING

The Senior Citizen Advisory Commission is an official Commission with the City of Florissant. The Senior Coordinator is the secretary for this Commission and is a signatory on the Senior Commission Bank Account along with 3 Commission members. All Senior Commission Bank Statements and Commission Treasury Reports are kept for City Review. Events and programs include six themed parties and five dances. The Mayor's Town Hall Meeting and the Senior Citizen Resource Fair are all funded by the Florissant Senior Citizen Commission but are planned and carried out by the Senior Office.

C. SILVER WORDS FUNDING

The Silver Words Club is a club for Widow/Widowers and Single Seniors. The Senior Coordinator attends and conducts the monthly Silver Words Meetings. The Silver Words Club has its own bank account, unaffiliated with the City of Florissant. Events and programs, including six trips, entertainers and speakers for the meetings, are all funded by the Silver Words Club account, but are planned and carried out by the Senior Office. 2017 Silver Words trips include Ameristar Casino, Arch Grounds Museum & Lunch at Spaghetti Factory, History Museum & Lunch at Bixby's, Blues Museum & Lunch, Montelle Winery & a TBA Christmas Trip.

ADMINISTRATIVE DEPARTMENT

Account	Actual 2015	Budget 2016	Proposed 2017	Adopted 2017
4010-Salaries	952,762	994,305	1,009,571	1,007,904
4013-Employees' Benefits	374,442	397,766	409,654	409,277
4014-Residency Incentive Program	112,500	120,000	120,000	120,000
4015-Unempl. Claim Reserve	11,617	27,000	20,000	20,000
4021-Uniforms	195	0	0	0
4023-Postage & Printing	47,486	45,000	60,000	60,000
4031-Supplies - City Functions	878	5,500	5,500	5,500
4032-Office Supplies & Maint.	42,635	49,300	48,100	48,100
4033-Copy Equip. Rental & Supplies	46,391	46,500	47,400	47,400
4041-Mayor's Expense	9,829	10,000	10,000	10,000
4042-Travel & Training	7,376	9,300	10,300	10,300
4050-Professional Services	314,992	399,720	349,720	349,720
4053-Legal Notices & Advertising	2,238	12,000	12,000	12,000
4054-Service Awards	6,020	12,000	12,000	12,000
4055-Insurance, Fire & Liability	824,379	931,000	875,000	875,000
4056-Organization Dues	23,265	24,165	24,150	24,150
4058-Boards & Commissions	1,524	2,000	2,000	2,000
4059-Election Expense	71,530	35,000	30,000	30,000
Total	2,850,059	3,120,556	3,045,395	3,043,351

PERSONNEL SERVICES

Full-time	973,397	988,647	988,647
Part-time	15,908	15,924	15,924
Overtime	5,000	5,000	3,333
Total Personnel Services	994,305	1,009,571	1,007,904

PERSONNEL SCHEDULE

Office of the Mayor	
Mayor	1.00
Executive Assistant to the Mayor	1.00
Total	2.00
Finance Department	
Director of Finance	1.00
Assistant Director of Finance	1.00
Accounting Clerk	4.00
Cashier	1.00
Total	7.00
Human Resources	
Director of Human Resources	1.00
Human Resource Specialist	1.00
Total	2.00
Total Personnel	17.79

Office of the City Clerk	
City Clerk/Legislative Assistant	1.00
Deputy City Clerk	1.00
Receptionist	1.00
Mailroom/Printing Clerk	1.00
Duplicating Equipment Operator p/t	0.50
Document Scanning Intern p/t	0.29
Total	4.79
Economic Development Department	
Economic Dev. Coordinator	1.00
Community Development Office	
Comm. Dev. Coordinator	1.00
Full-time	16.00
Full-time Equivalent (Part-time)	0.79
Full-time Elected Official	1.00

Administration Budget: 2017

		2016	2017
Account 4010 - Salaries			
Full-time Employees			
Mayor		1	1
Executive Assistant to the Mayor		1	1
Director of Finance		1	1
Assistant Director of Finance		1	1
Accounting Clerk		4	4
Cashier		1	1
Director of Human Resources		1	1
Human Resource Specialist - additional position		1	1
Economic Development Coordinator		1	1
Community Development Coordinator		1	1
City Clerk/Legislative Assistant		1	1
Deputy City Clerk		1	1
Receptionist		1	1
Mailroom/Printing Clerk		1	1
	Total full-time employees	17	17
Part-time Employees			
Duplicating Equipment Operator: 1 ea x 52 wks x 20 hrs/wk	hours	1,040	1,040
Intern for Document Scanning: 1 ea x 30 wks x 20 hrs/wk	hours	600	600
	Total part-time hours	1,640	1,640
Overtime: Audit, Month and Year End Reports, Other	dollars	5,000	3,333
Account 4013 - Employees' Benefits			
FICA, Pension, Medical, Dental, Life Insurance, Long-term disability			
Account 4014 - Residency Incentive Program	Total	120,000	120,000
Program to reward city employees for choosing to live in the City of Florissant: 100 employees x $100 per month x 12 months			
Account 4015 - Unemployment Claim Reserve	Total	27,000	20,000
1993 state law requires the city to pay all unemployment claims regardless of fault. 2012 $6,978, 2013 $13,439, 2014 $5,046, 2015 $11,278, 2016 $17,604 for 3 quarters			
Account 4023 - Postage & Printing	Total	45,000	60,000
Lease contract on postage machine and scale ($250/mo x 12 months)		3,000	3,000
Supplies for Postage Machine		1,000	1,000
Fees for Bulk Rate Permit #65		14,500	24,500
Forms and supplies, postage supplies, ink cartridges		1,500	1,500
Postage		25,000	30,000

Administration Budget: 2017

		2016	2017
Account 4031 - Supplies - City Functions	Total	5,500	5,500
Materials & supplies for various ceremonies and receptions (flag retiring, etc.)		1,500	1,500
Miscellaneous: frames, safe repair, food, safe deposit box, Sam's Club membership ($45), photos, pins, etc.		4,000	4,000
Account 4032 - Office Supplies & Maintenance	Total	49,300	48,100
Finance (01): $5,000 misc. office supplies, $500 envelopes, $1,600 letterhead & envelopes, $1,000 receipt forms, $1,000 office chairs, $1,000 toner		10,100	10,100
Software support for accounting software (includes Business License package)		29,200	28,000
City Clerk (02): Office supplies (includes microfilm)		6,500	6,500
Software support for aXs document management software		1,000	1,000
Human Resources (03): Office Supplies		1,500	1,500
Economic Development (04): $500 office supplies, $500 real estate package		1,000	1,000
Account 4033 - Copy Equipment & Supplies	Total	46,500	47,400
Monthly Copier Rental/Maintenance: includes Public Works, Administration, Government Building, Print Room, Housing, and the Park Department.		42,300	43,200
Paper Supplies		4,200	4,200
Account 4041 - Mayor's Expense	Total	10,000	10,000
Discretionary in town expenses, Rotary, auto, travel, and misc.			
Account 4042 - Travel & Training	Total	9,300	10,300
In town expenses and out of town travel for Department Heads and staff			
Director of Finance and Purchasing (11)		3,500	3,500
Director of Human Resources (12)		1,800	1,800
City Clerk (13)		2,500	3,500
Economic Development Director (14)		1,500	1,500
Account 4050 - Professional Services	Total	399,720	349,720
Audit - $18,400 annual audit, $1,000 GASB 45 OPEB (01)		19,300	19,400
City Attorney - $18,000 x 12 mo. (01)		248,000	216,000
Annual maintenance fee for the city codebook (01)		2,500	2,500
Miscellaneous professional services (01)		17,000	4,000
Flexible Spending Account - exposure for un-reimbursed medical (01)		3,000	3,000
Flexible spending account fees - $675 x 12 mo. (01)		8,200	8,100
Historic book restoration - restoring old minute and ordinance books (01)		2,500	2,500
Liquor license record checks - $11 x 20 (01)		220	220
Legislative consulting services - Missouri legislature (01)		24,000	24,000
Employee service, recognition and cost saving suggestion awards (01)		5,000	5,000
Public Relations consultant (01)		12,000	12,000

		2016	2017
Account 4050 - Professional Services (con't)			
Liens: File and release liens and easements with St. Louis County (01)		500	500
SB5 Legal defense		3,000	0
Bank Fees - $500 x 12 mo. (02)		6,000	6,000
Human Resources: $2,000 drug & alcohol testing, $6,000 new employment physicals, drug, psychological and written testing, $1,000 hepatitis vaccinations, $1,000 employee seminars and training, $3,000 employee record checks, $1,500 health and wellness (05)		16,500	14,500
Advertising (062)		32,000	32,000
Account 4053 - Legal Notices and Advertising	Total	12,000	12,000
City Clerk - public hearing ads (50 ads at $50 each)		2,500	2,500
Purchasing - bid ads (125 ads at $20 each)		2,500	2,500
Human Resources - help wanted ads for full and part-time positions		7,000	7,000
Account 4054 - Service Awards	Total	12,000	12,000
$5,000 Boards & Commissions Appreciation Dinner, $5,000 employee service awards, $2,000 employee appreciation event			
Account 4055 - Insurance, Fire, & Liability	Total	931,000	875,000
General liability, property, inland marine, crime, liquor, employee benefits, law enforcement, employment practices, public entity management, public entity employment related practices, and automobile		372,000	325,000
Excess liability			31,000
Excess earthquake liability			12,500
Deductible - general liability coverage		68,000	50,000
Workers Compensation Insurance		475,000	440,000
Flood Insurance		3,000	3,500
Accident & Sickness Policy		1,000	1,000
Pollution Liability - Fuel Storage Tanks		4,000	4,000
Public Officials Liability Bond: Mayor, Director of Finance, City Clerk		1,000	1,000
Cyber Liability		7,000	7,000
Account 4056 - Organization Dues	Total	24,165	24,150
General	Sub	21,625	21,800
North County, Inc. (2% standard automatic increase every year)		8,325	8,500
Florissant Old Town Partners		50	50
Greater North County Chamber of Commerce		350	350
Missouri Municipal League		5,700	5,700
St. Louis County Municipal League		7,200	7,200
National League of Cities ($4,500)		0	0
Mayor Thomas P. Schneider	Sub	540	350
Metro Mayors of St. Louis		350	350
Engineers Club of St. Louis		190	0

Administration Budget: 2017

		2016	2017
Account 4056 - Organization Dues (con't)			
Randal J. McDaniel: Director of Finance, Purchasing & Risk Mgmt.	Sub	760	760
Government Finance Officers Association of the US & Canada ($595)		0	0
Association for Financial Professionals		450	450
Missouri Association of Public Employee Retirement Systems (MAPERS)		100	100
Government Finance Officers Association of Missouri (GFOA of Missouri)		100	100
Florissant Valley Kiwanis		110	110
Missouri Notary Public Commission (Expires January 28, 2018)		0	0
Sonya Brooks-White: Director of Personnel	Sub	450	450
International Public Management Association for Human Resources (IPMA-HR)		150	150
IPMA-HR Greater St. Louis Chapter		0	0
Human Resource Management Association		300	300
Karen Goodwin: City Clerk	Sub	490	490
International Institute of Municipal Clerks		300	300
Missouri City Clerks & Finance Officers Association		65	65
Municipal Clerks & Finance Officers of Missouri Eastern Chapter		35	35
National Association of Parliamentarians		90	90
Bob Russell: Director of Economic Development	Sub	300	300
International Council of Shopping Centers		100	100
Missouri Economic Development Council		200	200
Account 4058 - Boards & Commissions	Total	2,000	2,000
Travel & expenses for boards and commissions, name plates		1,000	1,000
Subscriptions and publications		500	500
Planning & Zoning in-town training		500	500
Account 4059 - Election Expense	Total	35,000	30,000
City Council even ward elections scheduled for 2017			30,000

MUNICIPAL COURT DEPARTMENT

Account	Actual 2015	Budget 2016	Proposed 2017	Adopted 2017
4110-Salaries	473,701	504,762	452,879	452,879
4113-Employees' Benefits	134,744	131,154	116,560	116,560
4132-Office Supplies & Maint.	8,983	8,300	10,400	10,400
4142-Dues, Travel, Training	2,936	5,250	5,250	5,250
4150-Professional Service	33,361	60,800	61,750	61,750
Total	653,725	710,266	646,839	646,839

PERSONNEL SERVICES

Full-time	254,017	217,611	217,611
Part-time	250,745	235,268	235,268
Overtime	0	0	0
Total Personnel Services	504,762	452,879	452,879

PERSONNEL SCHEDULE

Municipal Court	
Court Clerk	1.00
Assistant Court Clerk	4.00
Assistant Court Clerk p/t	0.73
Reserve Police Officer p/t	0.73
Total	6.46
Total Personnel	7.46

Elected Positions	
Judge	1.00
Appointed Positions	
Provisional Judge	
Prosecuting Attorney	
Assistant Prosecuting Attorney	
Public Defender	
Full-time	5.00
Full-time Equivalent (Part-time)	1.46
Elected Officials	1.00

Municipal Court Budget: 2017

		2016	2017
Account 4110 - Salaries			
Full-time Employees			
Court Clerk		1	1
Assistant Court Clerk		5	4
Total full-time employees		6	5
Part-time Employees			
Regular or Call Dockets			
2 dockets per month with 2 Attorneys present	dockets		48
Appointed Judge 1 docket per month	dockets		12
DWS/DWR Dockets			
1 docket per month with 1 Attorney present	dockets		12
Housing Dockets			
1 docket per month with 2 Attorneys present	dockets		24
Trial Dockets			
1 dockets per month with 2 Attorneys present	dockets		24
Appointed Judge 1 docket every other month	dockets		6
Attorney Dockets			
1 docket per month with 2 Attorneys present	dockets		24
Failure To Appear Dockets			
1 docket per month with 1 Attorney present	dockets		12
Appointed Judge 1 docket every other month	dockets		6
Prosecuting Attorney Office Hours: 17 hours/month	hours	274	204
Assistant Prosecuting Attorney Office Hours: 5 hours/month	hours	61	60
Public Defender: 10 hours total as needed	hours	10	10
Reserve Police Officer (Bailiff): 1 x 29 hours x 52 weeks	hours	1,508	1,508
Assistant Court Clerk: 1 x 29 hours x 52 weeks	hours	1,508	1,508
Account 4132 - Office Supplies	Total	8,300	10,400
Printing supplies		2,000	2,000
Office machine maintenance		300	300
General office supplies		6,000	6,000
File cabinets (8)		0	2,100
Account 4142 - Dues, Travel and Training	Total	5,250	5,250
Judges Association dues/conferences/seminar training (in-state)		2,000	2,000
Court Clerk Association dues/conferences/seminar training (in-state)		1,250	1,250
Prosecutors Association dues/conference/seminar training (in-state) (3)		2,000	2,000
Account 4150 - Professional Services	Total	60,800	61,750
Maintenance support, communications and network access fees		3,200	3,200
Shared server license, interface, software maintenance		50,000	50,000
Bank fees - $200 per month x 12 mo.		2,400	2,400
Court ordered tests and expenses		1,000	1,250
Records destruction		900	900
Interpreter for the deaf as needed		300	1,000
Mental Health Court fees		3,000	3,000

HEALTH DEPARTMENT

Account	Actual 2015	Budget 2016	Proposed 2017	Adopted 2017
4210-Salaries	499,845	566,220	564,533	552,866
4213-Employees' Benefits	160,924	187,199	191,306	188,664
4221-Uniforms & Allowance	3,600	3,600	3,600	3,600
4226-Utilities	8,667	11,000	11,000	11,000
4227-Gasoline & Oil	35,643	45,000	46,000	46,000
4229-Building & Equip.	19,785	31,600	29,400	29,400
4232-Office Supplies & Maint.	4,895	7,000	8,000	8,000
4233-Materials & Supplies	25,732	33,000	35,000	35,000
4242-Dues, Travel, Training	370	2,000	3,000	3,000
4250-Professional Service	13,174	20,000	20,000	50,000
Total	772,635	906,619	911,839	927,530

PERSONNEL SERVICES

Full-time	345,870	337,183	337,183
Part-time	192,350	192,350	192,350
Overtime	28,000	35,000	23,333
Total Personnel Services	566,220	564,533	552,866

PERSONNEL SCHEDULE

Health Department	
Class "A" Foreman	1.00
Class "A" Person	1.00
Class "B" Person	1.00
Class "C" Person	2.00
Clerk Typist	2.00
Kennelman p/t	2.90
Summer Laborers p/t	2.46
Total	12.36

Transportation	
FLERT Bus Driver	2.00
FLERT Bus Drivers p/t	0.85
Senior Citizen Bus Drivers p/t	1.52
Total	4.37

Full-time	9.00
Full-time Equivalent (Part-time)	7.73
Total Personnel	16.73

Health Department Budget: 2017

	2016	2017
Account 4210 - Salaries		
Full-time employees		
Class "A" Foreman	1	1
Class "A" Person	1	1
Class "B" Person	1	1
Class "C" Person	2	2
Clerk Typist	2	2
FLERT Bus Driver	2	2
Total full-time employees	9	9
Part-time employees		
4 ea. Part-time Kennelmen: 52 weeks @ 29 hrs/week	6,032	6,032
4 ea. Part-time Summer Help: 32 weeks @ 40 hrs/week	5,120	5,120
S/T Total hours	11,152	11,152
Flert Bus Drivers		
1 ea. Part-time Bus Driver: 52 weeks @ 20 hrs/week	1,040	1,040
Weekend (Sat. & Sun.) 2 days @ 7 hrs/day x 52 weeks	728	728
S/T Total Hours	1,768	1,768
Senior Citizen Buses		
Kids Summer Program: 1 man x 6 hrs. x 11 weeks = 66 MH's	66	66
Fish Program: 1 man x 2 hrs. x 7 weeks = 14 MH's	14	14
Club Meetings (Mon & Wed): 2 days x 2 men x 4 hrs x 52	832	832
Sunday Church Services: 1 man x 4 hrs x 50 weeks	200	200
Trips: 2 men x 146 trips x 7 hrs.	2,044	2,044
Valley of Flowers: 2 men x 1 days x 7 hrs.	14	14
S/T Total Hours	3,170	3,170
Total Part-time hours	16,090	16,090
Overtime Total	28,000	23,333

Overtime

Court appearances, emergency Police call-outs, fire damaged structures, mosquito control and fogging, dog bite cases, storm damage events, foreclosures (clean-up junk at curb), Valley of Flowers, Fall Festival, Electronic Recycling Event, Document Shredding Event, EQC Commission, etc.

Account 4213 – Employees' Benefits

FICA, Pension, Medical, Dental, Life Insurance, Long-term disability

Acctount 4221 – Uniform & Safety Shoes	Total	3,600	3,600
Clothing allowance for all FT and PT employees …		2,700	2,700
T-shirts for full-time, part-time and seasonal field employees		900	900

		2016	2017
Account 4226 – Utilities	Total	11,000	11,000

Electric, gas, water, sewer, trash collection, phone, cable TV …

Account 4227 – Health/Buses Gasoline	Total	45,000	46,000

Fuel for pickup trucks, vehicle ULV's, foggers, hand fogger, lawn mowers, walk-behinds, weed eaters, and other related equipment
Oil for pickups, ULV's, Grizzly foggers, mowers and weed eaters
Bus-1, Bus-2, Bus-3, Bus-4, and ADA Van-1
Gasoline, tires, fluids, lubricants, maintenance, parts, supplies, etc.

Account 4229 – Building Maintenance & Supplies	Total	31,600	29,400

Radio repairs and maintenance for base, mobile and walkie/talkie units
ULV's repairs and maintenance for motors and blowers, as needed
Weed Eaters: parts for repairs
Raccoon cages as needed
Related small equipment repairs (hoses, tubing, tune-up kits, etc.)
Building maintenance, repairs, supplies and materials including paint, solvents, etc. Janitorial supplies and materials.
3 each Weed Eaters at $500/ea.=$1,500
2 each Handheld Blowers at $429/ea.=$858
1 each Power Washer at $900/ea.= $900

Account 4232 – Office Supplies / Printing		7,000	8,000

Printing, office supplies, forms, typewriter and adding machine, cameras, computers, printers and copy machine maintenance, operating supplies and maintenance, ink cartridges …

Account 4233 – Materials & Supplies	Total	33,000	35,000

Anvil for ULV's mosquito fogging, flushing solvent for cleaning ULV's, Altoside or Aqua/Bac briquettes to treat stagnate water for mosquito
Round-Up #5 for weed control. Pine-O-Lene disinfectant for kennel area.
Liqui-zyme Odor Eliminator, Bacterial/Enzyme Action
Rompum, Ketaset & Meticorton chemical used in animal control
Dog & cat food, traps, rodent cakes for baiting residential and commercial properties, creeks and sewers. Insecticide chemicals for

		2016	2017
Account 4242 – Dues/Travel/Training	Total	2,000	3,000

Flyers, publications and office training manuals
Pesticide license renewals and animal control training certification
Mileage, trip lunches, seminars, etc.

Account 4250 – Professional Services	Total	20,000	50,000

Rat/rodent control in creeks and resident rodent control by contractor
Veterinarian treatment of injured animals and possible court cases, as needed
Veterinarian rabies shots for new adoptions
Trash/debris/junk removal, eviction cleanup, tree/brush/vegetation removal, grass/weed cutting on residential/commercial properties as needed … by the City and/or by Contractor
Educational handouts and promotions for Recycling
Animal Disposal through St. Louis County
Electronic Recycling (spring) and Shredding (spring) Events
Contract for grass cutting at $30,000

RECREATION DEPARTMENT-THEATER

Account	Actual 2015	Budget 2016	Proposed 2017	Adopted 2017
4310-Salaries	151,395	156,535	149,047	149,047
4313-Employees' Benefits	54,209	64,115	63,937	63,937
4321-Uniforms & Allowance	0	250	250	250
4329-Bldg. Maint. & Supplies	10,851	7,700	7,700	7,700
4332-Office Supplies & Maint.	12,611	12,640	14,140	14,140
4342-Dues, Travel, Training	3,800	3,800	3,800	3,800
4350-Professional Services	4,777	9,000	6,000	6,000
4352-Theater Workshop	89,689	97,154	165,767	182,267
4354-Publicity	12,924	14,150	14,150	14,150
Total	340,256	365,344	424,791	441,291

PERSONNEL SERVICES

Full-time	141,907	134,404	134,404
Part-time	14,628	14,643	14,643
Overtime	0	0	0
Total Personnel Services	156,535	149,047	149,047

PERSONNEL SCHEDULE

Theater Manager	1.00
Assistant Theater Manager	1.00
Administrative Assistant	1.00
Clerk Typist p/t	0.73
Total	3.73

Full-time 3.00

Total Personnel 3.73 Full-time Equivalent (Part-time) 0.73

FCC Theatre Budget: 2017

		2016	2017
Account 4310 - Salaries			
Full-time Employees			
Theater Manager		1	1
Assistant Theater Manager		1	1
Administrative Assistant		1	1
	Total full-time employees	3	3
Part-time Employees			
Clerk-Typists: 29 hrs/wk x 52 weeks x 2nd year rate	hours	1,508	1,508
	Total part-time hours	1,508	1,508

Account 4321 - Uniforms	Total	250	250
Dry cleaning of sport coats		50	0
Sport coats, uniform shirts and cleaning as needed		200	250

Account 4329 - Theater Building Maintenance and Supplies	Total	7,700	7,700
General maintenance, repair and supplies for sound system		800	800
Bulbs, gel, light instrument repair and maintenance		3,100	3,100
Miscellaneous repair and hardware items		1,850	1,850
Light board service call contract		850	850
Floor care products		300	300
House and lobby carpet cleaning		800	800

Account 4332 - Office Supplies/Printing	Total	12,640	14,140
Books, subscriptions, and memberships		400	400
Paper and printing		3,000	3,000
Mailing supplies		3,000	3,000
Small office supplies		1,200	1,200
ThunderTix programming fees for twelve months		5,040	5,040
Ticket stock - purchase on a two year cycle		0	1,500

Account 4342 - Travel & Training	Total	3,800	3,800
Showcase of Performing Arts for Young People - Madison, Wisconsin		1,300	1,300
Arts Midwest Conference - Columbus, Ohio		1,300	1,300
Outside expenses for Missouri Arts Council and MACAA		500	500
Mileage for local business calls and related functions		300	300
Dues/registration - Intl. Assoc. of Performing Arts for Young People		400	400

FCC Theatre Budget: 2017

		2016	2017
Account 4350 - Professional Services	Total	9,000	6,000
Bank fees, charge card fees, service fees - $500 per month		6,000	6,000
Theater consultant		3,000	0
Account 4352 - Theatre Workshop	Total	97,154	182,267
Contemporary outdoor concerts including technical needs (Music Under the Stars: Butch Wax & Hollywood's, Billy Peek, Bob Kuban, etc.)		13,750	16,000
Thanksgiving Children's Special		5,000	0
Summer playground "Creative Dramatics Workshop" and Arts Assembly		16,500	16,500
St. Louis Family Theatre Series		0	85,180
Valley of Flowers Festival		49,000	49,000
Missouri Association of Community Arts Agencies (MACAA) membership		250	250
Valley of Flowers Children's Arts Program (Matching funds: grant from the Missouri Arts Council		8,954	11,637
Entertainment for the Fall Festival		2,500	2,500
"Poetry Out Loud" regional competition (reimbursable)		1,200	1,200
Account 4354 - Publicity	Total	14,150	14,150
FCC Theatre schedules		4,200	4,200
Special PR, mailing list, box office PR		2,600	2,600
St. Louis Visitors & Convention Comm. and Arts & Education Council		450	450
Discover Florissant display ads around Metro St. Louis		1,500	1,500
Postage for four Theater mailings - Calendar of Events (3) and Valley of Flowers brochure (1) at $1,350 per mailing		5,400	5,400
Account 096143 - Capital Additions	Total	2,850	0
Prior year capital additions		2,850	0

RECREATION DEPARTMENT - CIVIC AND COMMUNITY CENTERS

Account	Actual 2015	Budget 2016	Proposed 2017	Adopted 2017
4410-Salaries	1,203,591	1,325,534	1,335,415	1,329,415
4413-Employees' Benefits	256,190	285,501	293,578	292,219
4426-Utilities	289,578	352,800	352,800	352,800
Total	1,749,359	1,963,835	1,981,793	1,974,434

PERSONNEL SERVICES

Full-time	498,055	507,331	507,331
Part-time	809,479	810,084	810,084
Overtime	18,000	18,000	12,000
Total Personnel Services	1,325,534	1,335,415	1,329,415

PERSONNEL SCHEDULE

Superintendent of Recreation	1.00
Center Director I	2.00
Recreation Specialist	2.00
Clerk Typist	3.00
Custodian I	4.00
Total	12.00

Recreation Leaders II & III p/t	8.30
Receptionists p/t	5.94
Custodians p/t	4.95
Park Rangers p/t	3.21
Rink Mgrs, Guards, Cashiers p/t	2.93
JJE Pool Manager, Head Guard p/t	1.88
JJE Pool Lifeguards p/t	4.13
Concession Stand Manager p/t	0.96
Concession Stand Cashiers p/t	1.52
Instructors	
ADA Compliance	
Total	33.82
Full-time	12.00
Full-time Equivalent (Part-time)	33.82

Total Personnel 45.82

JJE/JFK Building Hours for the General Public
Daily (Sunday - Saturday): 8:00am - 9:00pm

Summer Hours: Memorial Day weekend to Labor Day
Monday through Friday: 8:00am - 9:00pm Saturday/Sunday: 8:00am - 5:00pm

The Community Centers will be closed to the public in observance of the following holidays:

Christmas Eve	Easter	Labor Day	Independence Day
Christmas Day	Memorial Day	Thanksgiving Day	New Years Day

Account 4410 - Salaries		2016	2017
Full-time Employees			
Superintendent of Recreation		1	1
Center Director I		2	2
Recreation Specialist		2	2
Clerk Typist		3	3
Custodian		4	4
	Total full-time employees	12	12

Part-time Employees

Recreation Leader III	JJE Pool Manager	Park Rangers
Recreation Leader II - Fitness Center	JJE Pool Head Guards	Instructors
Concession Managers and Cashiers	JJE Pool Lifeguards	Rink Managers
Receptionists	Custodians	Rink Guards
ADA Compliance		Rink Cashiers

Overtime: $12,000

		2016	2017
Recreation Leader III (Supervisors)			
JJE/JFK: 2,790 hours x 2 facilities = 5,580 hours x 2nd year rate	hours	5,580	5,580
Theater: 1 x 25 hours/week x 52 weeks plus 1 x 12 hours/week x 52 weeks = 1,924 hours x 2nd year rate	hours	1,924	1,924
Recreation Leader II			
JJE / JFK Fitness Center: 4,878 hours x 2 facilities = 9,756 hours x 2nd year rate	hours	9,756	9,756
Receptionists			
Customer Service Desk:			
JFK: 4,500 hours x 2nd year rate	hours	4,500	4,500
500 hours (special events/training) x 1st year rate	hours	500	500
JJE: 6,655 x 2nd year rate (2,000 hours to fill Center Ranger hours)	hours	6,655	6,655
700 hours (special events/training) x 1st year rate	hours	700	700

Civic and Community Centers Budget: 2017

		2016	2017
Custodians			
JJE / JFK: 3,228 hours x 2 facilities = 6,456 hours x 2nd year rate	hours	6,456	6,456
1,750 hours (special events / training) x 2nd year rate	hours	1,750	1,750
Theater: 2,080 hours x 2nd year rate	hours	2,080	2,080
Park Rangers			
JFK (Rentals): 240 hours x Park Ranger Supervisor II 2nd year rate	hours	240	240
896 hours x Park Ranger x 2nd year rate	hours	896	896
JJE: Weekdays - 2,259 hours; Weekends - 2,080 hours; Special Events/Rink - 700 hours; City Hall - 500 hours; Total - 5,539 hours			
4,529 hours x Park Ranger x 2nd year rate	hours	4,529	4,529
1,010 hours x Park Ranger Supervisor II 2nd year rate	hours	1,010	1,010
Ice Rink			
Rink Managers: 1,700 hours x 2nd year rate	hours	1,700	1,700
Rink Guards: 2,600 hours x 2nd year rate	hours	2,600	2,600
Rink Cashiers: 1,800 hours x 2nd year rate	hours	1,800	1,800
JJE Pool			
JJE Pool Managers: 1,560 hours x 2nd year rate	hours	1,560	1,560
Head Guards: 2,340 hours x 2nd year rate	hours	2,340	2,340
JJE Lifeguards: Public Sessions: 3,588 hours x LG 2nd year rate	hours	3,588	3,588
Classes/Rentals: 5,000 hours x LG 2nd year rate	hours	5,000	5,000
Concessions (St. Ferdinand Park, Bangert Pool, Koch Aquatic Center)			
Managers: St. Ferdinand: 500 hours x 2nd year rate	hours	500	500
Koch: 751 hours x 2nd year rate	hours	751	751
Bangert: 751 hours x 2nd year rate	hours	751	751
Cashiers: St. Ferdinand (includes Koch Cart Attendant): 900 hours x 2nd year rate	hours	900	900
KPFAC: 1,502 hours x 2nd year rate	hours	1,502	1,502
Bangert: 751 hours x 2nd year rate	hours	751	751
Total part-time hours		70,319	70,319
Instructors:		$80,000	$80,000
ADA Compliance:		$1,500	$1,500
Account 4426 - Utilities	Total	352,800	352,800
Centers		347,300	347,300
Nature Lodge		5,500	5,500

RECREATION DEPARTMENT - PLAYGROUND

Account	Actual 2015	Budget 2016	Proposed 2017	Adopted 2017
4510-Salaries	121,917	141,153	141,153	141,153
4513-F.I.C.A.	9,327	10,798	10,798	10,798
Total	131,244	151,951	151,951	151,951

PERSONNEL SERVICES

Full-time	0	0	0
Part-time	141,153	141,153	141,153
Overtime	0	0	0
Total Personnel Services	141,153	141,153	141,153

PERSONNEL SCHEDULE

Directors p/t	0.47
Assistant Directors p/t	0.64
Playground Recreation Leaders p/t	6.48
Total	7.59

Full-time 0.00

Total Personnel 7.59 Full-time Equivalent (Part-time) 7.59

Summer Playground Budget: 2017

		2016	2017
Program Dates: June 5 - July 14, 2017			
Program dates subject to change based on local school district schedules			
The summer playground program is a six week program. There is no camp on July 4th.			
Account 4510 - Part-time Seasonal			
Directors			
320 hours + 9 orientation hours = 329 hours			
329 hours x 3 Directors = 987 hours x 2nd year rate	hours	987	987
Assistant Directors			
264 hours + 9 orientation hours = 273 hours			
273 hours x 4 Assistant Directors = 1,092 hours x 2nd year rate	hours	1,092	1,092
Playground Recreation Leaders			
187.5 hours + 15 orientation hours & training hours = 202.5 hours			
202.5 hours x 48 Playground Recreation Leaders = 9,720 hours x 2nd year rate	hours	9,720	9,720
202.5 hours x 13 Playground Recreation Leaders = 2,632 hours x 1st year rate	hours	2,632	2,632
Special Needs Recreation Leaders			
187.5 hours + 15 orientation hours & training hours = 202.5 hours			
202.5 hours x 2 Special Needs Recreation Leaders = 405 hours x 2nd year rate	hours	405	405
"BEFORE AND AFTER CARE" PROGRAM			
Monday - Friday, 7:30am - 9:00am and 3:00pm - 5:30pm, 6 weeks			
Assistant Directors			
120 hours x 2 Assistant Directors = 240 hours x 2nd year rate	hours	240	240
Playground Recreation Leaders			
120 hours x 6 Playground Recreation Leaders = 720 hours x 2nd year rate	hours	720	720
Total part-time hours		15,796	15,796

The Summer Playground Program is held 9am - 3pm each weekday for a six week period. There is a nine hour orientation session for the entire staff before the program begins.

RECREATION DEPARTMENT - BANGERT POOL

Account	Actual 2015	Budget 2016	Proposed 2017	Adopted 2017
4610-Salaries	119,952	148,991	149,092	149,092
4613-F.I.C.A.	8,385	11,398	11,406	11,406
4626-Utilities	31,567	25,000	35,000	35,000
Total	159,904	185,389	195,498	195,498

PERSONNEL SERVICES

Full-time	0	0	0
Part-time	148,991	149,092	149,092
Overtime	0	0	0
Total Personnel Services	148,991	149,092	149,092

PERSONNEL SCHEDULE

Pool Manager p/t	0.44
Head Guard p/t	0.37
Lifeguards p/t	4.85
Cashiers p/t	0.74
Total	6.40
Total Personnel	6.40

Full-time 0.00

Full-time Equivalent (Part-time) 6.40

RECREATION DEPARTMENT - KOCH AQUATIC CENTER

Account	Actual 2015	Budget 2016	Proposed 2017	Adopted 2017
5610-Salaries	212,166	173,533	173,664	173,664
5613-F.I.C.A.	16,196	13,275	13,285	13,285
5626-Utilities	80,183	65,000	65,000	65,000
Total	308,545	251,808	251,949	251,949

PERSONNEL SERVICES

Full-time	0	0	0
Part-time	173,533	173,664	173,664
Overtime	0	0	0
Total Personnel Services	173,533	173,664	173,664

PERSONNEL SCHEDULE

Pool Manager p/t	0.28
Head Guard p/t	0.55
Lifeguards p/t	6.31
Cashiers p/t	0.83
Total	7.97
Total Personnel	7.97

Full-time 0.00

Full-time Equivalent (Part-time) 7.97

Bangert Pool Budget: 2017

Pool Season: May 27 - August 6, 2017 (72 days of operation)
Weekends Only: August 7 - September 4, 2017 (9 days of operation)
Hours of operation: Daily 12:30 - 7:30pm Holidays 12:30 - 5:00pm
Total Days of Operation in 2017: 81 (2016: 81 Days of Operation)

Account 4610 - Salaries: Part-time Seasonal		2016	2017
Pool Manager			
9.5 hours x 81 days = 770 hours x 2nd year rate	hours	770	770
Head Guard			
9.5 hours x 81 days = 770 hours x 2nd year rate	hours	770	770
Lifeguards			
9.5 hours x 81 days = 770 hours x 11 Lifeguards = 8,470 hours			
8,470 hours x Lifeguard 2nd year rate	hours	8,470	8,470
Cashiers (Admission)			
9.5 hours x 81 days = 770 hours x 2 Cashiers = 1,540			
1,540 hours x 2nd year rate	hours	1,540	1,540
Swim Team			
4 hours x 35 days = 140 hours			
140 hours x Pool Manager 2nd year rate	hours	140	140
4 hours x 35 days = 140 hours x 4 Lifeguards = 560 hours			
560 hours x Lifeguard 2nd year rate	hours	560	560
Swim Team Coaches Salaries:		$9,000	$9,000
Swim Lessons (youth)			
2 hours x 24 days = 48 hours x 16 Lifeguards = 768 hours			
768 hours x Lifeguard 2nd year rate	hours	768	768
Swim Lessons (adult)			
1 hour x 16 days = 16 hours x 2 Lifeguards =			
32 hours x 2nd year rate	hours	32	32
Playground Swim			
2 hours x 12 days = 24 hours x 11 Lifeguards = 264 hours			
264 hours x Lifeguard 2nd year rate	hours	264	264
Total part-time hours		13,314	13,314
Pre-season training, prep-work and post-season winterizing:		$5,000	$5,000
Special events, programs and rentals:		$2,500	$2,500
Account 4626 - Utilities	Total	25,000	35,000

Koch Park Family Aquatic Center Budget: 2017

		2016	2017
Pool Season: June 3 - August 6, 2017 (65 days of operation)			
Hours of Operation: Monday - Friday 12:00 - 6:00pm			
Saturday/Sunday 12:00 - 7:00pm			
Holidays 12:00 - 5:00pm			
Total Scheduled Days of Operation in 2017: 65 (2016: 65 Days of Operation)			
Account 5610 - Salaries: Part-time Seasonal			
Pool Manager			
8.5 hours x 45 days = 383 hours x 2nd year rate			
9.5 hours x 20 days = 190 hours x 2nd year rate			
573 hours x 2nd year rate	hours	573	573
Head Guard			
8.5 hours x 45 days = 383 hours			
9.5 hours x 20 days = 190 hours			
573 hours x 2 Head Guards = 1,146 hours x 2nd year rate	hours	1,146	1,146
Lifeguards			
8.5 hours x 45 days = 383 hours			
9.5 hours x 20 days = 190 hours			
573 hours x 22 Lifeguards = 12,606 hours x 2nd year rate	hours	12,606	12,606
Cashiers (Admissions)			
8.5 hours x 45 days = 383 hours			
9.5 hours x 20 days = 190 hours			
573 hours x 3 Cashiers = 1,719 hours x 2nd year rate	hours	1,719	1,719
Playground Swim			
2 hours x 12 days = 24 hours x 22 Lifeguards = 528 hours			
528 hours x Lifeguard 2nd year rate	hours	528	528
Total part-time hours		16,572	16,572
Pre-season training, prep-work and post-season winterizing:		$7,500	$7,500
Special events, programs and rentals:		$2,500	$2,500
Account 5626 - Utilities	Total	65,000	65,000

RECREATION DEPARTMENT - PARKS

Account	Actual 2015	Budget 2016	Proposed 2017	Adopted 2017
4710-Salaries	332,911	386,220	254,558	253,558
4713-Employees' Benefits	80,354	85,411	77,374	77,148
4726-Utilities	79,667	114,200	114,200	114,200
4750-Professional Services	33,694	40,000	40,000	52,000
Total	526,626	625,831	486,132	496,906

PERSONNEL SERVICES

Full-time	171,946	174,740	174,740
Part-time	211,274	76,818	76,818
Overtime	3,000	3,000	2,000
Total Personnel Services	386,220	254,558	253,558

PERSONNEL SCHEDULE

Office of the Director

Director of Parks & Recreation	1.00
Administrative Assistant	1.00
Total	2.00

Park Rangers

Senior Park Ranger	1.00
Park Rangers p/t	2.62
Total	3.62

Part-time and Seasonal Staff

Umpires and Referees - contract	0.00
Total	0.00

Full-time	3.00
Full-time Equivalent (Part-time)	2.62
Total Personnel	5.62

Parks Budget: 2017

		2016	2017
Account 4710 - Salaries			
Full-time Employees			
Director of Parks and Recreation		1	1
Administrative Assistant		1	1
Senior Park Ranger		1	1
Total full-time employees		3	3
Overtime: $2,000			
Part-time Employees			
Park Rangers:			
All Parks: 35 hours x 52 weeks = 1,820 hours			
1,820 hours x 2nd year rate	hours	1,820	1,820
All Parks: 45.5 hours x 20 weeks (peak season) = 910 hours			
910 hours x 2nd year rate	hours	910	910
St. Ferdinand & Koch Parks: 45.5 hours x 22 weeks x 2 Rangers =			
2,002 hours x 2nd year rate		2,002	2,002
Nature Lodge: 10:00am - 2:00pm, 2 days x 4 hours = 8 hours			
8 hours x 52 weeks = 416 hours x 2nd year rate	hours	832	416
Special Activities and Rentals: 310 hours x 2nd year rate	hours	310	310
Total part-time hours		5,874	5,458
Field Supervisors and Referees:	dollars	20,000	20,000
Account 4726 - Utilities	Total	114,200	114,200
Parks		114,200	114,200
Account 4750 - Professional Services	Total	40,000	52,000
Umpires contracted through the ASA		40,000	40,000
Charge card fees		0	12,000

RECREATION DEPARTMENT - GOLF COURSE

Account	Actual 2015	Budget 2016	Proposed 2017	Adopted 2017
0610-Salaries	390,413	290,200	296,218	311,441
0613-Employees' Benefits	126,786	73,586	91,349	91,979
0621-Uniforms & Allowance	821	1,000	1,000	1,000
0623-Postage & Printing	529	1,696	1,696	1,696
0626-Utilities	68,643	67,200	67,200	67,200
0627-Gasoline	19,399	20,000	20,000	20,000
0628-Merchandise	74,114	99,750	110,750	110,750
0629-Bldg., Maint., & Supplies	116,185	104,500	105,000	105,000
0630-Equipment Repairs	16,315	24,500	25,000	25,000
0632-Office Supplies & Maint.	3,254	3,500	3,500	3,500
0642-Dues, Travel, Training	2,378	4,170	4,080	4,080
0650-Professional Services	87,386	102,005	98,550	98,550
0654-Publicity	310	11,300	7,000	7,000
Total	906,533	803,407	831,343	847,196

PERSONNEL SERVICES

Full-time	140,138	166,335	162,995
Part-time	150,062	129,883	148,446
Overtime	0	0	0
Total Personnel Services	290,200	296,218	311,441

PERSONNEL SCHEDULE

Course Operations	
Golf Clubhouse Manager	1.00
Asst. Golf Clubhouse Manager	1.00
Pro Shop Staff p/t	1.14
Cart Attendants p/t	1.17
Food & Beverage Staff p/t	1.42
Total	5.73

Course Maintenance	
Golf Course Superintendent	1.00
Golf Course Mechanic	1.00
Groundskeeper I, II and III p/t	3.32
Total	5.32

Total Personnel	11.05
Full-time	4.00
Full-time Equivalent (Part-time)	7.05

Golf Course Budget: 2017

		2016	2017
Revenue		550,000	575,000
Account 12010 - Green Fees		200,000	230,000
Account 12210 - Cart Fees		220,000	190,000
Account 12500 - Pro Shop Sales		30,000	45,000
Account 12600 - Concession Sales and Fees		90,000	100,000
Account 12910 - Other Miscellaneous		10,000	10,000
Expenditures			
Account 0610 - Salaries			
Full-time Employees			
Golf Clubhouse Manager		1	1
Assistant Golf Clubhouse Manager - new position		0	1
Golf Course Superintendent		1	1
Golf Course Mechanic		1	1
	Total full-time employees	3	4
Part-time Employees	Total hours	14,668	14,668
Pro Shop Manager: 1 emp. x 29 hours x 52 weeks	hours	1,508	1,508
Pro Shop Staff: 1 emp. x 30 hours x 29 weeks	hours	870	870
Cart Attendants: 6 emp. x 15 hours x 27 weeks	hours	2,430	2,430
Groundskeeper I: 6 emp. x 30 hours x 26 weeks	hours	4,680	4,680
Groundskeeper II: 1 emp. x 30 hours x 24 weeks	hours	720	720
Groundskeeper III: 1 emp. x 29 hours x 52 weeks	hours	1,508	1,508
Food & Beverage Manager: 1 emp. x 28 hours x 34 weeks	hours	952	952
Food & Beverage: 4 emp. x 20 hours x 25 weeks	hours	2,000	2,000
Account 0613 - Employee Benefits			
F.I.C.A., Pension, Medical, Dental, Life Insurance, Long Term Disability			
Account 0621 - Uniforms and Allowances	Total	1,000	1,000
Full-time and part-time employees		1,000	1,000
Account 0623 - Postage & Printing	Total	1,696	1,696
Postage		96	96
Printing scorecards, signage, miscellaneous items		1,600	1,600
Account 0626 - Utilities	Total	67,200	67,200
Electric		12,000	12,000
Gas/Propane		2,500	2,500
Water		45,000	45,000
Sewer		1,000	1,000
Cable TV		3,500	3,500
Trash		1,200	1,200
Alarm		2,000	2,000

Golf Course Budget: 2017

		2016	2017
Account 0627 - Gas and Oil	Total	20,000	20,000
Gasoline, oil, tires, fluids, lubricants, maintenance, parts, supplies, etc. for golf course vehicles and equipment.		20,000	20,000
Account 0628 - Merchandise	Total	99,750	110,750
Pro Shop merchandise for resale: includes balls, tees, shirts, hats, gloves, etc. (01)		30,750	30,750
Concession supplies: includes beer, liquor, food, snacks, soda, etc. (02)		69,000	80,000
Account 0629 - Building Maintenance and Supplies	Total	104,500	105,000
00 Building Maintenance/Building Supplies	Sub	30,000	30,000
Includes materials and supplies such as portable outhouse rental, pest control, minor maintenance supplies such as hardware, paint, caulk, plumbing, electrical materials and supplies, cleaning supplies, linens, backflow preventer inspection, and various other supplies. Includes replacement banquet tables as needed.			
01 Building Maintenance/Course Supplies	Sub	74,500	75,000
Includes materials and supplies such as sand, top soil, sod, seed, flags, ball washers, bag stand, cups, pesticides, fungicides, herbicides, fertilizers, and other supplies. Also includes materials and supplies such as pipe, fittings and other items necessary to maintain the course irrigation system. Includes soil testing and small equipment repairs and maintenance.			
Account 0630 - Equipment Repairs	Total	24,500	25,000
Maintenance of course vehicles and equipment, including miscellaneous parts and supplies, tools, tire repairs, small engine parts and service, batteries, lights, radio work, upholstery, glass, etc.		24,500	25,000
Account 0632 - Office Supplies and Printing	Total	3,500	3,500
Pens, paper and various office supplies.		3,500	3,500
Account 0642 - Dues, Travel and Training	Total	4,170	4,080
PGA dues		250	0
GCSA dues - Golf Course Superintendent		375	375
MVGCSA dues		365	365
Course Supt.: PGA Show in San Antonio, Texas		1,500	1,500
Greater North County Chamber of Commerce		250	250
Northwest Chamber of Commerce		80	240
Certification expenses		200	200
Mileage for in-town travel		500	500
VGM Club - purchasing cooperative membership		500	500
Metropolitan Amateur Golf Association		150	150

Golf Course Budget: 2017

		2016	2017
Account 0650 - Professional Services	Total	102,005	98,550
01 Miscellaneous	Sub	9,405	6,950
Handicap Fees		255	1,000
Electric repair as needed		1,800	1,800
Tree removal		2,500	2,500
Hepatitis "A" Vaccinations		150	150
Operating Permits		1,500	1,500
Ice machine rental		3,200	0
02 Bank Fees	Sub	6,800	6,800
Bank and charge card fees		6,800	6,800
06 Cart Lease and Rentals	Sub	85,800	84,800
Cart Lease: Ord. #8034 for 80 carts (45 electric, 25 gas, 7 utility, 1 shuttle, 2 bar) Term of Lease: Annual payments of $69,795.56 due June 1, 2014, 2015, 2016, and 2017 plus est. property tax of $10,000 (Final payment due June 1, 2017). $368,397.86 financed for a 44 month term with the lease agreement dated April, 2014)		80,800	79,800
Cart Rentals		5,000	5,000
Account 0654 - Publicity	Total	11,300	7,000
Advertising in newspaper, magazine, radio, and other media.		11,300	7,000
Account 0961 - Capital Additions (Park Improvement Fund)	Total	23,500	10,000
Golf Course Equipment	Sub	8,000	5,000
Two (2) Jacobsen Eclipse 322 attachments - $2,500 each			5,000
Golf Course Improvements	Sub	15,500	5,000
Various tee, bunker, fairway renovations			5,000

PUBLIC WORKS DEPARTMENT

Account	Actual 2015	Budget 2016	Proposed 2017	Adopted 2017
4810-Salaries	2,338,936	2,450,829	2,581,278	2,532,945
4813-Employee's Benefits	945,651	973,050	1,026,119	1,015,171
4821-Uniforms & Allowance	8,825	9,900	9,900	9,900
4826-Utilities	97,371	100,000	101,000	101,000
4827-Gasoline	46,135	80,000	81,000	81,000
4832-Office Supplies & Maint.	21,530	21,000	22,500	22,500
4839-Ice/Snow Removal	216,000	217,320	0	0
4842-Dues, Travel, Training	30,478	37,715	36,735	36,735
4850-Professional Service	43,743	83,000	82,000	82,000
4851-Street Lighting	453,696	530,000	0	0
4875-Gasoline Control Account	6,265	25,000	25,000	25,000
Total	4,208,630	4,527,814	3,965,532	3,906,251

PERSONNEL SERVICES

Full-time	2,197,199	2,261,452	2,261,452
Part-time	118,630	174,826	174,826
Overtime	135,000	145,000	96,667
Total Personnel Services	2,450,829	2,581,278	2,532,945

PERSONNEL SCHEDULE

Office of the Director	
Director of Public Works	1.00
Executive Assistant	1.00
Total	2.00

Street Division	
Street Superintendent	1.00
Permit/Inspection Clerk	1.00
Class "A" Foreman	1.00
Class "A" Person	2.00
Class "B" Person	2.00
Class "C" Person	4.00
Street Sweeper	1.00
Equipment Maintenance Supv.	1.00
Equipment Maint. Mechanic	2.00
Summer Laborers p/t	1.15
Total	16.15

Sewer Lateral	
Permit/Inspection Clerk	1.00
Class "A" Person	1.00
Class "B" Person	1.00
Class "C" Person	1.00
Total	4.00

Engineering Division	
City Engineer	1.00
Civil Engineer I	0.00
Engineering Intern p/t	0.00
Permit/Inspection Clerk	1.00
Custodian	2.00
Custodian p/t	0.73
Chief Engineer	1.00
Building Maintenance	2.00
Total	7.73

Building Division	
Building Commissioner	1.00
Plan Reviewer	1.00
Multi-Building Inspector	7.00
Inspector/Code Person	1.00
Code Enforcement p/t	1.45
Permit/Inspection Clerk	8.00
Permit/Inspection Clerk p/t	1.45
Building/Housing Inspector p/t	1.45
Total	22.35

Total Personnel	52.23
Full-time	46.00
Full-time Equivalent (Part-time)	6.23

Public Works: Building/Engineering/Street Budget 2017

Account 4810 - Salaries	2016	2017
Full-time employees		
Director of Public Works	1	1
Executive Assistant	1	1
City Engineer	1	1
Civil Engineer I … position eliminated	1	0
Building Commissioner	1	1
Plan Reviewer	1	1
Multi-Building Inspector	7	7
Code Enforcement Inspector … new position	0	1
Permit Inspection Clerk … added one clerk (transfer from Court)	10	11
Street Superintendent	1	1
Class "A" Foreman	1	1
Class "A" Person	3	3
Class "B" Person	3	3
Street Sweeper	1	1
Class "C" Person	5	5
Equipment Maintenance Supervisor	1	1
Equipment Maintenance Mechanic	2	2
Chief Engineer	1	1
Building Maintenance	2	2
Custodian I	2	2
Total full-time employees	45	46
Part-time employees		
Bldg./Housing Inspector: 2 ea @ 52 weeks @ 29 hrs/week	3,016	3,016
Code Enforcement: 2 ea @ 52 weeks @ 29 hrs/week	0	3,016
Permit Inspection Clerk: 2 ea. @ 52 weeks @ 29 hrs/week	1,508	3,016
Summer Laborer: 4 ea. @ 15 weeks @ 40 hrs/week	2,400	2,400
Engineering Summer Intern: 0 ea. @ 15 weeks @ 40 hours	600	0
Custodian: 1 ea. @ 52 weeks @ 29 hrs/week	1,508	1,508
Total Part-time hours	9,032	12,956

Overtime

Street Department: snow removal, storm damage, tree removal, street flooding, some street work, Saturday mechanics, special projects, emergencies, festivals, etc.

Building Division: inspections, Boards and Commission meetings, public hearings, additional scheduling and data entry duties by clerical staff; Police and Fire call outs, night & weekend inspections, office work in general, and emergencies.

Engineering Division: 1) Street work surveying, layout, contractor supervision, commission meetings, office work in general and emergencies and 2) Start up and shut down of pools, ice and roller rink, special events/festivals, HVAC emergency call outs, electric power outages and managing construction projects.

Total Overtime Amount	135,000	96,667

		2016	2017
Account 4813 – Employees' Benefits			
FICA, Pension, Medical, Dental, Life Insurance, Long-term disability			
Account 4821 – Uniforms & Safety Shoes	Total	9,900	9,900
Clothing allowance for all Full-time and Part-time employees		8,700	9,300
T-Shirts for Full-time, Part-time and Seasonal field employees		600	600
City logo shirts for City Engineer, Building Comm. & Plan Reviewer		600	0
Account 4826 – Utilities	Total	100,000	101,000
Electric, natural gas, water, sewer, phone, trash collection, cable TV, etc. Includes City Hall, Government Building, Sign Shop and City Garage			
Account 4827 – Gasoline	Total	80,000	81,000
Major/Minor Construction Equipment, trucks, vehicles and tools in Public Works Department … Fuel, oil, lubrication, and hydraulic fluids costs are forecasted to remain high … includes inspector vehicles added to fleet ... Fuel pump and tank repairs and maintenance			
Account 4832 – Printing & Office Supplies - City Hall & Garage	Total	21,000	22,500
Photos, film and developing			
Printing, copy paper, printer ink cartridges, drafting supplies, supply closet			
Printing of new residential "Welcome" packages			
Printing of educational flyers for permits, residential and commercial			
Code books/code update subscription services/NFPA			
Equipment repairs and replacement (file cabinets, lamps, chairs, copier, computers, monitors, printers, cameras, typewriters, tables, I-pads, etc.)			
Miscellaneous batteries, computer supplies, software, publications, etc.			
County real estate records			
Inspection sheets, permits, door tags			
Minimum housing letters/envelopes, etc.			
Computer software and software updates			
NEW Portable Projector and Screen for training … $1,300			
Account 4839 – Ice/Snow Removal	Total	217,320	0

Public Works: Building/Engineering/Street Budget 2017

Account 4842 – Dues/Travel/Training	Total	2016	2017
		37,715	36,735
Dues	Sub	3,975	3,895
Director: Missouri Society of Prof. Engineers ($212), Engineers Club ($180), APWA Local & International ($169) …		561	561
City Engineer: Engineers Club ($180), APWA Local & International ($169), CESSWI (Certified Erosion, Sediment and Storm Water Inspector $90) …		349	439
Civil Engineer I: Engineer's Club ($0), CESSWI (Certified Erosion, Sediment and Storm Water Inspector ($0)		270	0
Building Commissioner: ICC ($240), MABOI ($40), SLACE ($35), AIA ($551)		866	866
Building Inspectors: MABOI (10 @ $40), ICC (10 @ $35), SLACE (10 @ $35)		1,100	1,100
Plan Reviewer: MABOI ($40), IAEI ($120), SLACE ($35), ICC ($35)		230	230
Street Superintendent: APWA Local & International ($169), ISSA ($130)		299	299
Chief Engineer: Asbestos Certification Renewal, Stationary Engineer's License Fee		300	400
Travel	Sub	20,000	20,000
Plan Reviewer, P/T Inspector, Bldg. Commissioner, Director, City Engineer, and others … less Inspector vehicles …		20,000	20,000
Training	Sub	13,740	12,840
Director: Area Conferences and Seminars …		400	400
APWA Conference and Equipment Show…		1,800	1,800
City Engineer: GIS, APWA and Area Seminars …		1,000	800
Civil Engineer I: Local Seminars and Area Conferences …		500	500
Building Commissioner: Area Code Conferences/Seminars, MABOI Fall Conference …		1,500	1,300
Plan Reviewer: Area Code Conferences and Seminars, MABOI Fall Conference …		1,500	1,300
Chief Engineer & Staff: Area Seminars, Conferences and Asbestos Classes/Certifications		800	900
Street Superintendent: Area Seminars		400	400
Street Personnel/Mechanics: Area Conferences		800	800
Building Inspectors: MABOI Fall Conference (3 @ $680)		2,040	2,040
Area Code Seminars (3 @ $400)		1,200	1,200
P/T Inspectors: Area Seminars		400	400
Exec. Asst. & Clerical Staff: Personal development classes		600	400
Computer & iPad Classes/Training		800	600

Public Works: Building/Engineering/Street Budget 2017

		2016	2017
Account 4850 – Professional Services	Total	83,000	82,000
Materials Testing			
Traffic Consultation			
Miscellaneous Public Works projects - design services			
Testing of fire sprinkler systems and backflow preventers			
Computer Consultant for PW File Maker Data-base and iPads			
Weather Service for Winter Storms $2,800			
Pedestrian Traffic Signal Maintenance and Repair by St. Louis County			
Trimming city and private trees around street lights …			

Account 4851 – Street Lighting	Total	530,000	0
Average annual usage		490,000	0
New and Replacement Streetlights in areas as needed		20,000	0
Decorative Streetlight Repair/Replacement – N. Lindbergh, N. Hwy. 67, Old Town, Paddock Estates, and other areas		20,000	0

Account 4875 – Gasoline Control Account	Total	25,000	25,000

POLICE DEPARTMENT

Account	Actual 2015	Budget 2016	Proposed 2017	Adopted 2017
4910-Salaries	6,995,893	7,096,937	7,234,090	7,234,090
4913-Employee's Benefits	2,682,621	2,654,711	2,751,082	2,751,082
4921-Uniforms & Allowance	72,057	84,700	86,200	86,200
4924-Telephone	185,660	0	0	0
4926-Utilities	51,246	62,500	62,500	62,500
4927-Gasoline	149,905	256,500	256,500	256,500
4929-Bldg., Maint., & Supplies	58,130	72,000	72,000	72,000
4930-Equip. Repair-Vehicle	17,887	57,800	61,800	61,800
4932-Office Supplies & Maint.	33,063	41,000	42,000	42,000
4933-Copy Equip. Rental & Supply	9,394	11,500	22,000	22,000
4934-Communication Service	273,964	296,900	306,000	306,000
4935-Armory Supplies & Guns	15,212	28,700	28,700	28,700
4942-Dues, Travel, Training	67,713	80,400	87,300	87,300
4961-Capital Additions	58,560	97,000	0	0
4975-Gasoline Control Account	31,130	65,000	65,000	65,000
Total	10,702,435	10,905,648	11,075,172	11,075,172

PERSONNEL SERVICES

Full-time	6,294,612	6,422,692	6,422,692
Part-time	248,699	248,699	248,699
Overtime	305,000	309,000	309,000
Holiday Pay	248,626	253,699	253,699
Total Personnel Services	7,096,937	7,234,090	7,234,090

PERSONNEL SCHEDULE

Office of the Chief	
Chief of Police	1.00
Administrative Assistant	1.00
Total	2.00

Bureau of Support Services	
Major	1.00
Sergeant	1.00
Police Officer	3.00
Law Enforcement IT Specialist	1.00
Dispatcher	9.00
Dispatcher p/t	2.18
Clerk Typist	4.00
Custodian	1.00
Custodian p/t	0.73
Total	22.91

Bureau of Field Operations	
Captain	1.00
Lieutenant	5.00
Sergeant	6.00
Police Officer	58.00
Reserve Officer p/t	2.90
Clerk Typist	1.00
Total	73.90

Bureau of Investigations	
Captain	1.00
Sergeant	2.00
Police Officer	10.00
Transportation Correction Officers and Corrections Officers	6.00
Total	19.00

Full-time	112.00
Full-time Equivalent (Part-time)	5.81
Total Personnel	117.81

FLORISSANT POLICE DEPARTMENT
FISCAL 2017 BUDGET

ACCOUNT 491001: SALARIES

2016	2017	LINE ITEM
$ 6,543,238	$ 6,676,391	Full-time Salaries (including holidays)
$ 305,000	$ 309,000	Overtime
$ 248,699	$ 248,699	Part-time Salaries
$ 7,096,937	$ 7,234,090	TOTAL

FULL-TIME EMPLOYEES

2016	2017	
1	1	Chief of Police
1	1	Major
2	2	Captains
4	5	Lieutenants
10	9	Sergeants
70	71	Police Officers (new officer for occupancy code enforcement)
0	0	Police Officer Grant Positions (Unfilled)/Academy Recruit
1	1	Information Technology Administrator
1	2	Administrative Assistant
5	4	Clerks
1	1	Custodian
6	6	Corrections/Transport Officers
9	9	Dispatchers
111	112	TOTAL FULL-TIME EMPLOYEES

PART-TIME EMPLOYEES

Reserve Officers: The City has hired part-time Police Officer/Rangers to patrol the city parks. These part-time Officers are fully commissioned police officers working 29 hours a week. The Officers will patrol the city parks, recreation centers and nature lodge enforcing the ordinances and keeping the peace.

Part-time Dispatchers: Allows for better scheduling and helps save overtime paid to full-time dispatchers. These hours help to reduce the amount of paid overtime needed to cover vacations, illnesses, training, and other uncovered shifts in the schedule. The budget reflects the total number of hours requested without limiting the number of actual part-time dispatchers needed in order to maximize the utility of the part-time dispatchers.

2016	2017	
-	-	Dispatchers: 87 hours/week x 52 weeks = 4,524 hours
1	1	Custodian: 1 x 29 hours/week x 52 weeks = 1,508 hours
4	4	Reserve Officers (Police Park Rangers): 4 x 29 hours/week x 52 weeks = 6,032 hours

PART-TIME EMPLOYEES (con't)

2016	2017	
4,524	4,524	Dispatcher hours
1,508	1,508	Custodian hours
6,032	6,032	Reserve Officer (Police Park Ranger) hours
12,064	12,064	TOTAL PART-TIME HOURS

ACCOUNT 491002: OVERTIME

2016	2017	LINE ITEM
$ 230,000	$ 230,000	General Overtime
$ 20,000	$ 20,000	DEA Reimbursed Overtime
$ 20,000	$ 20,000	FBI Reimbursed Overtime
$ 35,000	$ 39,000	Grant Reimbursed Overtime
$ -	-	Mid-Year Appropriation
$ 305,000	$ 309,000	TOTAL

Overtime funding for 2017 needs to be adjusted for each line item as detailed below.

General Overtime: This overtime includes court appearances and court security; investigation of serious crimes; unusual occurrences; holiday foot patrols; surveillances; special details including the Valley of Flowers Festival, Fourth of July Program, Old Town Fall Festival, the Veteran's Parade; and staffing vacation and sick-time relief, especially in communications. We will continue to utilize compensatory time in lieu of overtime where possible.

DEA Reimbursed Overtime: The Department has one detective assigned to the U. S. Drug Enforcement Administration's St. Louis Drug Task Force. The task force agreement requires that the detective be paid a fixed overtime differential that is reimbursed to the City by the DEA. This item is adjusted based on the salary of the officers assigned

FBI Reimbursed Overtime: The Department was able to place one Detective in this violent crime task force The task force agreement requires that the detective be paid a fixed overtime differential that is reimbursed to the City by the FBI. This item is adjusted based on the salary of the officers assigned

Grant Reimbursed Overtime: The Department has received traffic grant awards for overtime projects for 2017.

FLORISSANT POLICE DEPARTMENT
FISCAL 2017 BUDGET

ACCOUNT 4921: UNIFORMS

2016	2017	LINE ITEM
$ 17,200	$ 17,200	Uniform Cleaning & Repair
$ 48,000	$ 49,000	Uniform Purchase & Replacement
$ 16,000	$ 16,000	Detective Clothing Allowance
$ 3,500	$ 4,000	Badge Replacement and Repair
$ 84,700	$ 86,200	TOTAL

Uniform Cleaning & Repair: The department provides dry cleaning of uniforms and detective clothing. No increase for 2017.

Uniform Purchase & Replacement: This covers the cost of replacing uniforms and body armor. A United States Department of Justice BVP 50/50 match grant was awarded in 2016 but no funds have been awarded to the Department for 2017. New grants have been applied for. However, it is unknown as to whether the department will receive those. Requested increase of $1,000 for 2017.

Detective Clothing Allowance: No increase is requested for 2017.

Badge Replacement and Repair: These funds provide for the repair and replacement of badges. Requested increase of $500 for 2017

FLORISSANT POLICE DEPARTMENT
FISCAL 2017 BUDGET

ACCOUNT 4926: UTILITIES

2016	2017	LINE ITEM
$ 42,000	$ 42,000	Electricity
$ 11,000	$ 11,000	Natural Gas
$ 5,000	$ 5,000	Water
$ 2,500	$ 2,500	Sewer
$ 2,000	$ 2,000	Trash
$ 62,500	$ 62,500	TOTAL

Utilities: This account reflects the various utilities used by the police department. No significant changes are anticipated during 2017.

ACCOUNT 4927: GASOLINE

2016	2017	LINE ITEM
$ 255,000	$ 255,000	Gasoline
$ 1,000	$ 1,000	Pump Repair
$ 500	$ 500	Pump Inspections
$ 256,500	$ 256,500	Total

Gasoline: The cost of regular unleaded gasoline fluctuates wildly. The average cost is currently around $2.10 for 2016. At this time it is anticipated that current funding is sufficient.

FLORISSANT POLICE DEPARTMENT
FISCAL 2017 BUDGET

ACCOUNT 4929: BUILDING and JAIL MAINTENANCE

2016	2017	LINE ITEM
$ 1,500	$ 1,500	Rug Rental
$ 500	$ 500	Fire Extinguisher Service
$ 21,500	$ 21,500	Prisoner Supplies
$ 8,000	$ 8,000	Janitorial Supplies
$ 500	$ 500	Pest Control
$ 37,500	$ 37,500	Building Repairs (HVAC/ Electrical/Plumbing)
$ 2,500	$ 2,500	Furniture and Fixtures
$ 72,000	$ 72,000	Total

Rug Rental: This item reflects the rental cost of runners and rugs for slip and fall protection. No increase for 2017.

Fire Extinguisher Service: This item reflects the annual inspection, service and if necessary, replacement of fire extinguishers in the police department headquarters. It will be unchanged in 2017.

Prisoner Supplies: This item covers the cost of prisoner meals and medications as well as the periodic replacement of jumpsuits, mattresses and blankets. No increase for 2017.

Janitorial Supplies: This item includes the supplies necessary to clean and maintain the police building including janitorial supplies, paint, hardware, and miscellaneous small repair parts. Based on the increasing level of maintenance required to maintain an aging building. No increase for 2017.

Pest Control: This item covers the cost of our monthly pest control service and will be unchanged for 2017.

Building Repairs: These funds cover the costs associated with both routine and emergency maintenance of electrical, mechanical, plumbing, and the heating and cooling systems of the 33 year old police building. There is constant maintenance, painting, replacing of flooring, ceiling tiles and a number of light fixtures throughout the building. No increase for 2017.

Furniture and Fixtures: This item covers the cost of miscellaneous furniture and fixtures of a minor nature that require replacing as needed. No increase for 2017.

FLORISSANT POLICE DEPARTMENT
FISCAL 2017 BUDGET

ACCOUNT 4930: VEHICLE MAINTENANCE & REPAIRS

2016	2017	LINE ITEM
$ 4,800	$ 4,800	Vehicle Washes
$ 42,000	$ 45,000	Vehicle Repair
$ 800	$ 800	First Aid Supplies
$ 600	$ 600	Fire Extinguisher Service
$ 2,000	$ 2,000	Flares
$ 600	$ 600	Inspections & Licenses
$ 7,000	$ 8,000	Miscellaneous Vehicle Parts
$ 57,800	$ 61,800	TOTAL

Vehicle Washes: This line covers the cost of regular washes and periodic detailing of police vehicles. It also covers decontamination of blood or other biohazards that occur. No increase for 2017.

Vehicle Repair: This line covers the cost to repair vehicles resulting from crashes, including repairs to windshields and other repairs not normally made by the City garage. Due to changes to accounting procedures, more funds have to be appropriated into this line item to cover vehicle accidents. Increase of $3,000 is requested for 2017.

First Aid Supplies: This item covers the cost of first aid supplies including bandages, rubber gloves, breathing airways, and hand sanitizers. No increase for 2017

Fire Extinguisher Service: This item covers the recharging or replacement of fire extinguishers carried in the police vehicles. No increase for 2017

Flares: This covers the cost of flares used for controlling traffic at crashes and road closures. No increase for 2017.

Inspections & Licenses: This is the cost of titling all department vehicles as well as the inspection and licensing of unmarked vehicles. No increase for 2017.

Miscellaneous Vehicle Parts: The item covers the cost of replacing graphics on cars, replacing lost wheel covers, replacement weapons racks or radio mounts, and other miscellaneous repair parts for vehicles and bicycles. We found this year that none of the prior radio mounting equipment, computer mounts or gun racks fit in the new police vehicles, forcing the department to purchase these items for every new vehicle. Increase of 1,000 for 2017 is requested.

FLORISSANT POLICE DEPARTMENT
FISCAL 2017 BUDGET

ACCOUNT 4932: OFFICE AND EVIDENCE SUPPLIES

2016	2017	LINE ITEM
$ 3,000	$ 3,000	Citations and Mobile Printer Paper
$ 8,000	$ 9,000	Computer/Server/Soft ware/Printer Parts and Repairs
$ 1,500	$ 1,500	Crime Prevention Supplies
$ 10,000	$ 10,000	Evidence Supplies
$ 1,000	$ 1,000	Microfilm Reader Maintenance Agreement
$ 500	$ 500	Drug Test Kits
$ 15,000	$ 15,000	Office Supplies
$ 1,000	$ 1,000	Intoxilyzer Repair and Supplies
$ 1,000	$ 1,000	Printing Services
$ 41,000	$ 42,000	TOTAL

Citations and Mobile Printer Paper: This reflects the cost of having citation and warning books printed to state requirements. Most citations are now generated on the mobile computers and this item also covers the cost of thermal printer paper used to print the violator's copy of citations on the mobile computers. No increase for 2017.

Computer/Printer Parts and Repairs: This covers the cost of repairing or purchasing replacement parts for computers, printers and other small office machines. Increase of $1,000 for 2017 is requested.

Crime Prevention Supplies: This line funds the cost of public relations, educational materials and promotional items for the department. No increase for 2017.

Evidence Supplies: This covers the cost of crime scene processing supplies such as fingerprinting materials, photographic media and replacement of filters and parts on technical equipment in the processing room. No increase for 2017.

Microfilm Reader Maintenance Agreement: This is an annual maintenance and service agreement for the Record Room microfilm reader. No increase for 2017.

Office Supplies: There have been increases in supply costs. We carefully monitor consumption. No increase for 2017.

Intoxilyzer Repair and Supplies: This includes the costs of maintenance and equipment for the alcohol breath testing instrument. No increase for 2017.

Printing Services: This includes the costs for printing flyers and brochures that cannot be printed in-house. No increase for 2017.

FLORISSANT POLICE DEPARTMENT
FISCAL 2017 BUDGET

ACCOUNT 4933: COPIER EQUIPMENT AND SUPPLIES

2016	2017	LINE ITEM
$ 9,000	$ 8,000	Copier Lease/Supplies
$ -	$ 11,500	Printer Management Lease Toner and Supplies
$ 2,500	$ 2,500	Paper and Toner
$ 11,500	$ 22,000	TOTAL

Copier Lease: This item covers the cost of leasing and maintaining the department's one copying machine and all of the computer printers located throughout the department.

Printer Management Lease: This item covers the continued Maintenance/Repair/Toner of all printers located with in the department.

Paper and Toner: This item covers the cost of toner for the copier and paper used for the department's one copying machine and all of the computer printers located throughout the department.

FLORISSANT POLICE DEPARTMENT
FISCAL 2017 BUDGET

ACCOUNT 4934: COMMUNICATIONS SERVICES

2016	2017	LINE ITEM
$ 7,500	$ 7,500	CCTV Maintenance Agreement
$ 14,000	$ 14,000	Radio Repair & Maintenance
$ 2,000	$ 2,000	Existing Federal Requirements 2 factor authentication
$ 135,000	$ 125,000	REJIS Subscription & Network Charges
$ 2,000	$ 2,000	REJIS Record Checks for Human Resources
$ 20,000	$ 20,000	REJIS Wireless Service
$ 4,000	$ 24,000	REJIS Professional Services
$ 58,000	$ 48,000	Global and Computer Services
$ 2,000	$ 2,000	Audiolog Maintenance Agreement
$ 13,000	$ 13,000	Live Scan System Maintenance Agreement
$ 7,000	$ 7,000	Speed Warning Systems Data Package
$ 1,000	$ 1,000	Liberty Interview Systems
$ 5,000	$ 5,000	Dictation System Maintenance Agreement
$ 4,000	$ 4,000	Investigative Databases
$ 7,500	$ 7,500	Evidence-On-Q Software Maintenance Agreement
$ 2,200	$ 2,200	Oceans Systems Maintenance Agreement
$ 2,000	$ 2,000	Walkie-Talkie Battery Replacement
$ 1,000	$ 1,000	CellBrite Investigation Maintenance Agreement
$ 2,200	$ 2,200	Illegal Sign Project support software and auto dialer
$ -	$ 4,000	PlanIT Scheduling Software Maintenance Agreement
$ -	$ 5,100	Power DMS Systems Maintenance Agreement
$ 7,500	$ 7,500	RCCEG Forensic Computer Analysis
$ 296,900	$ 306,000	TOTAL

Closed Circuit TV Maintenance Agreement: This item covers the 12 month service agreement that includes the server, software, monitors, and cameras for the police department's closed circuit TV system used to monitor the safety and security of the holdover and the perimeter of the building. No increase for 2017.

Radio Repair and Maintenance: This item covers the cost of repair and service for the base radio system, mobile radios, emergency lighting, radar equipment, and the like. The department has a service agreement. No increase for 2017.

REJIS Subscription and Network Services: This is the cost for the Regional Justice Information Services (REJIS) used by the department to input and query arrest histories including the NCIC database, the Missouri Department of Revenue license and registration files and the regional mug shot system. There has been a reduction in cost for some REJIS services and the department would like to reallocate this money into REJIS Professional services for 2017.

ACCOUNT 4934: COMMUNICATIONS SERVICES (con't)

Global and Computer Services: This covers the maintenance and support of the Global Software for our computer aided dispatch and records management and maintenance and support of our Dell window server on which the software operates. Through restructuring there has been a reduction, which we would like to reallocate into REJIS professional services.

Audiolog Communications Recorder Maintenance and Support: This covers the cost of the department's service agreement to provide maintenance and support for the digital recorder and software used to record, archive and playback all radio and telephone lines in the communications center.

Live Scan Maintenance and Support: This is the annual maintenance agreement for the digital fingerprinting system that links the department with state and national fingerprint files. No increase for 2017.

Speed Warning Systems: The department has four speed warning units. These units are portable and can be moved to various locations throughout the city. The units provide the traffic unit with important data regarding speed and traffic volume. No increase for 2017.

Dictation System Maintenance and Support: This is the cost of the maintenance agreement for the dictation system used for the dictation and transcription of police reports. Based on the current agreement, this will be unchanged in 2017.

Investigative Databases: The Bureau of Investigation utilizes several investigative databases. The Accurint and Leads-on-Line services are priced based on investigative transactions. No increase for 2017.

Evidence-On-Q Software Maintenance Agreement: This covers the cost of maintaining the software used to barcode and track evidence and property. This cost also covers the department inventory tracking system. No increase for 2017.

Oceans Systems Software and Maintenance and Support: This covers the cost of maintaining the software used to enhance and copy security videos to better identify suspects when utilizing video taped at crime scenes.

Walkie Talkie Battery Replacement: This covers the cost of periodically replacing batteries for officer's portable radios. No increase for 2017.

CellBrite Investigative Maintenance and Support: Investigative equipment used for cell phone down loading. No increase for 2017.

Illegal Sign Project Support: This is the computer software and dialing support needed for the illegal sign removal project. No increase for 2017.

PlanIT Scheduling Program: Software and maintenance agreement, $4,000 for 2017.

Power DMS: CALEA Document and Training Management Program maintenance and support agreement, $5,100 for 2017.

RCCEEG: Regional Computer Crimes Education and Enforcement Group: Used for the forensic analysis of computers for criminal investigations. No increase for 2017.

FLORISSANT POLICE DEPARTMENT
FISCAL 2017 BUDGET

ACCOUNT 4935: ARMORY SUPPLIES & GUNS

2016	2017	LINE ITEM
$ 12,000	$ 12,000	Ammunition, Targets & Firearms Repairs
$ 5,000	$ 5,000	Less Lethal Munitions
$ 1,000	$ 1,000	Range Maintenance
$ 10,100	$ 10,100	Replacement of ten (10) Tasers
$ 600	$ 600	Replacement of shot gun
$ 28,700	$ 28,700	TOTAL

Ammunition, Targets, and Firearms Repairs: This item covers the cost of ammunition used for both duty and semi-annual firearms training. It includes .40 caliber duty ammunition, .40 caliber practice ammunition, .223 caliber rifle ammunition, and 12 gauge shotgun ammunition. It also covers the cost of targets and range supplies as well as the small arms parts necessary to maintain the weaponry. No increase for 2017.

Less Lethal Munitions: This item includes the on-duty and training cartridges for the Taser Electronic Control Devises, Oleoresin Capsicum (pepper spray) and the .12 gauge "bean bag" munitions. No increase for 2017.

Range Maintenance: This covers the annual cost to replace the backstop in the range trailer at Koch Park as well as any small parts necessary to maintain the trailer. No increase for 2017.

Tasers: The departments tasers are starting to run out of warranty and useful-life. I request that we start to replace ten of these tasers a year at a cost $1,010 per taser. No increase for 2017.

Shotgun: The department has three shotguns manufactured in 1974 which need to be replaced. I recommend replacing 1 per year at a cost of $600. The shot gun taken out of service will be retained and used for training.

FLORISSANT POLICE DEPARTMENT
FISCAL 2017 BUDGET

ACCOUNT 4942: DUES, TRAVEL, & TRAINING

2016	2017	LINE ITEM
$ 16,000	$ 16,000	St. Louis County & Municipal Academy
$ 2,000	$ 2,000	Police Canine Training
$ 12,000	$ 15,000	Training Seminars/Travel Expenses
$ 7,500	$ 7,500	Command Level Management Training
$ 6,000	$ 6,000	Organizational Memberships
$ 1,000	$ 1,000	Special/Liquor Investigations
$ 8,000	$ 8,000	Training Materials and Computer Based Training
$ 1,000	$ 2,000	Chief's Expense Account
$ 1,000	$ 1,000	Miscellaneous Petty Cash
$ 3,000	$ 3,000	Canine Expenses
$ 1,400	$ 1,400	Major Case Squad Training
$ 1,500	$ 1,500	Random Drug Testing
$ 1,600	$ 1,600	Lab Testing for DWI and Forensic investigative cases
$ 500	$ 500	Valley of Flowers Festival Expense
$ 1,000	$ 1,000	Explorer Post
$ 2,000	$ 2,000	Polygraph Certification Conference
$ 1,800	$ 2,000	CALEA Conference
$ 2,000	$ 2,000	IACP Conference
$ 4,100	$ 4,800	Accreditation Fees
$ 500	$ 500	Citizens Emergency Response Team, CERT
$ -	$ -	Polygraph Training Course
$ 2,000	$ 2,000	Police Fitness Trainer Recertification/Training
$ 500	$ 500	SRO program supplies
$ 4,000	$ 6,000	Community Outreach
$ 80,400	$ 87,300	TOTAL

St. Louis County & Municipal Police Academy: The department is a member of the County & Municipal Police Academy (CMPA) which provides recruitment and in-service training programs. No increase for 2017.

Police Canine Training: This covers the cost of in-service training for our four canine teams. No increase for 2017.

Training Seminars/Travel Expenses: This funds the training of officers and staff at locations other than the academy as well as the cost of transportation and lodging for out of town travel. Increase of $3,000 is requested for 2017.

Command Level Management Training Academy: For a Commander to attend one of the following management training institutions: FBI National Academy, Southern Police Institute or Missouri Police Chiefs Association Command College (MOPCA).

Organizational Memberships: This line item includes the cost of memberships for our officers and staff in organizations that benefit the agency and the community. No increase for 2017.

ACCOUNT 4942: DUES, TRAVEL, & TRAINING (con't)

Special Investigations Fund: These funds cover the cost of narcotics and liquor investigations as well as informant funds. No increase for 2017.

Training Materials and Computer Based Training: This item provides funding for computer based legal training. The city's liability insurance carrier recognizes the value of this each year with premium rebates that offset much of the cost of the training. No increase for 2017.

Chief's Expense Account: This line is used to fund meetings and various incidental expenses relative to my position.

Canine Expenses: The department has four canine teams and this item covers food, equipment and supplies necessary to insure the care and training of the four animals. No increase for 2017.

Major Case Squad Training: The funding covers the membership and training of our officers in the Major Case Squad of Greater St. Louis. No increase for 2017.

Random Drug Testing: The city contracts for random drug screening of all sworn officers and civilian employees as well as reserve officers. In addition to the actual testing, the contractor arranges the random draw. No increase for 2017.

Laboratory Testing for DWI and Forensic Investigative Cases: The department has an agreement with a local provider for the forensic analysis of samples in investigations. No increase for 2017.

Valley of Flowers Festival Expenses: This expenditure is the cost of meals for officers working the fair grounds during the Valley of Flowers festival. No increase for 2017.

Explorer Post: This amount, combined with their fund raisers, covers the cost of our Explorer Scouts to attend the national conference. No increase for 2017.

Polygraph Certification Conference: The department has two certified polygraph examiners who must attend bi-annual certification by the American Polygraph Association. One examiner attends each year. No increase for 2017.

CALEA & IACP Conference: These conferences provide valuable information on new technology, legal issues and training on many issues concerning law enforcement and the community. Increase of $200 for CALEA for 2017.

Accreditation Fees: The department received it's Sixth consecutive three year accreditation by CALEA in 2016. Accreditation has resulted in a discount in our liability insurance premium, more than offsetting the accreditation fees. Increase of $700 for 2017.

CERT Training: This expenditure is the cost of training materials and equipment necessary for the Citizen Emergency Response Team (CERT). No increase for 2017.

Training for Polygraph Examiner: This training is to certify a member of the department as a certified Polygraph Examiner. No funds are needed in this years budget.

SRO Program Supplies: This expenditure covers miscellaneous materials and supplies for the School Resource Officers. No increase for 2017.

ACCOUNT 4942: DUES, TRAVEL, & TRAINING (con't)

Community Outreach: This item will be used for community outreach programs that will foster positive law enforcement relationships with the youth and general public. Request an increase of $2,000 for 2017.

ACCOUNT 4961: CAPITAL ADDITIONS (General Fund)

2016	2017	LINE ITEM
$ 137,000	$ -	Asset Forfeiture Funds
$ 137,000	$ -	TOTAL

This is the account used to reflect expenditures utilizing asset forfeiture funds which are not part of the regular budget.

ACCOUNT 4975: GASOLINE CONTROL ACCOUNT

2016	2017	LINE ITEM
$ 65,000	$ 65,000	Unleaded Gasoline Control Account
$ 65,000	$ 65,000	TOTAL

This is the account used only by the Finance Department to conduct internal transactions or cross charges between each department using the unleaded gasoline supply at the police department. All gasoline ultimately used by the police department is purchased under account 4927. No increase for 2017.

FLORISSANT POLICE DEPARTMENT
FISCAL 2017 BUDGET

ACCOUNT 0361: CAPITAL IMPROVEMENTS (Capital Improvement Fund)

Vehicles:

2016	2017	
$ -	$ 224,000	Purchase of eight new vehicles and related equipment at $28,000 each
	$ 70,000	Purchase of two new Chevrolet Tahoe Police Vehicles and related equipment at 35,000 each
$ -	$ 16,000	Radio/Emergency equipment installation at $1,600 each for ten new vehicles.
$ -	$ -	Trade in value of eight patrol vehicles - those vehicles in reasonably good shape will be retained and utilized in other departments
$ 300,000	$ 310,000	Net Cost of New Police Vehicles

Vehicle Replacement: The department has a fleet of 43 automobiles ranging in age from 2007 to 2015. In 2017 we need to replace eight Police vehicles. Two of the vehicles taken out of service will be utilized as decoy vehicles.

Chevrolet Tahoe Police Vehicles: the department needs to replace two of these vehicles which are from 2011. Both of these vehicle have over 100,000 miles on them and having repetitive service problems.

Radio/Emergency Equipment: I am requesting $16,000 to cover the cost of installation of the radios and emergency equipment.

Trade-in Value: The eight vehicles taken out of service will not be disposed of unless they are deemed to be in extremely poor condition. The vehicles will be transferred to other city departments in an effort to maximize the city's investment in these vehicles.

FLORISSANT POLICE DEPARTMENT
FISCAL 2017 BUDGET

ACCOUNT 0361: CAPITAL IMPROVEMENTS (con't)

Miscellaneous Capital Items:

2016	2017	
$ -	$ 24,800	HVAC system upgrade
$ -	$ 3,000	Liberty Interview server replacement
$ -	$ 15,000	Office reconfigure and work station update
$ -	$ 45,000	Replacement of mobile car computers/printers/devices and related equipment.
$ -	$ 14,000	Replacement of desktop computers and related items
$ -	$ 10,000	Replace and upgrade security cameras and equipment
$ -	$ 20,000	Networking Infrastructure Upgrade
$ -	$ 5,000	Replace Servers and related equipment.
$ -	$ 5,000	Computer Systems Backup/Related security software
$ -	$ 10,500	Purchase two mobile speed monitoring units
$ -	$ 10,000	Continue the Access door locks and proximity cards/Server upgrade
$ 105,000	$ 162,300	Total Miscellaneous Items

HVAC System Upgrade: The Department needs to upgrade the HVAC system in the communications and central area of the station. It has been discovered that the current systems in not adequate in this area of the building and a new system needs to be installed for this area.

The Liberty Interview server needs to be upgrade and replaced.

Police Building Offices: Several offices need to be reconfigured and the work stations updated.

Replacement Mobile Car Computers: The annual replacement of mobile car computers, printers, electronic devices, and related equipment.

Replacement of Desk Top Computers: The department utilizes 65 desk top personal computers and small servers through the station. These are used for everything from operating maps and radios, tracking evidence and storing photographs, to transcribing and retrieving reports. It is necessary to periodically update the computers and operating systems. To avoid a mass purchase of hardware and software in any one year, I propose a regular replacement cycle of one fifth of these computers each year.

Video Security Cameras: Currently the police station has numerous video cameras that need to be replaced or upgraded along with related equipment.

ACCOUNT 0361: CAPITAL IMPROVEMENTS (con't)

Networking Infrastructure Upgrade: Much of the network cabling and switching needs to be upgraded and replaced in order for computers, phones and other related equipment to function properly

Replace Servers/laptops and related equipment: The department utilizes several servers that need to periodically upgraded or replaced.

Computer Systems Backup/Related Security Software: Hardware and Software maintenance for various backup systems.

Mobile speed monitoring units: Purchase two mobile speed monitoring units to be used throughout the city to monitor vehicle traffic.

Access Control Door Lock System: Continue the Access Control door lock system project for four additional doors in the basement of the police building.

MEDIA DEPARTMENT

Account	Actual 2015	Budget 2016	Proposed 2017	Adopted 2017
7010-Salaries	120,366	132,062	128,264	120,837
7013-Employees' Benefits	43,058	43,752	45,319	44,942
7030-Equipment Repair	594	3,000	3,000	3,000
7032-Office Supplies & Maint.	1,368	2,000	2,000	2,000
7033-Materials & Supplies	130	2,500	2,500	2,500
7042-Dues, Travel, Training	219	3,000	3,000	3,000
7050-Professional Service	26,179	28,750	28,900	28,900
Total	191,914	215,064	212,983	205,179

PERSONNEL SERVICES

Full-time	91,642	93,469	93,469
Part-time	35,420	29,795	24,035
Overtime	5,000	5,000	3,333
Total Personnel Services	132,062	128,264	120,837

PERSONNEL SCHEDULE

Media/TV Station Manager	1.00
Video Specialist	1.00
Contract Employees	
Total	2.00
Total Personnel	2.00

Full-time 2.00
Full-time Equivalent (Part-time) 0.00

Media Department Budget: 2017

		2016	2017
Account 7010 - Salaries			
Full-time Employees			
Media/TV Station Manager		1	1
Video Specialist		1	1
Total full-time employees		2	2
Contract employees		35,420	24,035
Council Meetings	Total	5,040	6,960
Director - 1 x $75 x 24 productions		1,200	1,800
Assistant Director - 1 x $50 x 24 productions		960	1,200
Camera Persons - 2 x $45 x 24 productions		1,680	2,160
Host - 1 x $75 x 24 productions		1,200	1,800
Council Action	Total	3,720	0
Director - 0 x $45 x 24 productions		720	0
Assistant Director - 0 x $40 x 24 productions		600	0
2 Camera Persons - 0 x $40 x 24 productions		1,200	0
Host - 0 x $75 x 24 productions		1,200	0
Valley of Flowers	Total	660	1,075
Director - 1 x $200		100	200
Asst. Director - 1 x $150		90	150
Videographers - 3 x $125 each		240	375
Audio Engineer - 1 x $150		90	150
Production/Office Assistants - 2 x $100		140	200
Additional Contract Help As Needed	Total	26,000	16,000
Location Videographer		7,000	5,000
Contract Editor		7,000	5,000
Contract Producer - special programs		12,000	6,000
Account 7010 - Salaries - overtime		5,000	3,333
Account 7030 - Equipment Repair	Total	3,000	3,000
Account 7032 - Office Supplies and Maintenance	Total	2,000	2,000
Account 7033 - Materials and Supplies	Total	2,500	2,500
Account 7042 - Dues, Travel and Training	Total	3,000	3,000
Account 7050 - Professional Services	Total	28,750	28,900
Mailing costs for "Florissant Focus" - $1,500 x 5 issues		7,500	7,500
Postage for 5 issues of the "Florissant Focus" x $4,250 per issue		21,250	21,250
Bulletin Board music		0	150
Account 0361 - Capital Additions	Total	0	0
Prior year capital additions		0	0

03 - CAPITAL IMPROVEMENT FUND

	Actual 2015	Budget 2016	Proposed 2017	Adopted 2017
REVENUE				
Capital Improvement Sales Tax	3,529,090	3,300,000	3,450,000	3,450,000
Interest	0	0	0	0
Grants & Reimbursements	104,231	236,662	514,614	514,614
Total Budgeted Revenue	3,633,321	3,536,662	3,964,614	3,964,614
Less Total Budgeted Expenditure			(4,844,148)	(4,949,448)
Equal Revenue Over/(Under) Expenditure			(879,534)	(984,834)
Plus Estimated Beginning Fund Balance			1,131,563	1,131,563
Equal Estimated Ending Fund Balance			252,029	146,729
EXPENDITURES				
0329-Building Maint. & Supplies	59,202	58,600	61,000	61,000
0330-Equip. Repairs - Vehicles	125,048	130,000	130,000	130,000
0333-Materials & Supplies	108,890	110,000	110,000	110,000
0334-Street Markings	8,450	13,000	9,000	9,000
0339-Ice/Snow Removal	0	0	149,130	149,130
0350-Professional Service	371,468	589,928	922,418	922,418
0351-Street Lighting	0	0	555,000	555,000
0352-Street Contracts	1,648,144	1,650,000	1,650,000	1,650,000
0353-Bridge Repair & Maint.	41,014	60,000	60,000	60,000
0354-Sidewalk Repairs	146,163	150,000	150,000	150,000
0355-Debt Payment	318,706	328,000	228,000	228,000
0361-Capital Additions	427,746	851,900	819,600	924,900
Total	3,254,831	3,941,428	4,844,148	4,949,448

03 - CAPITAL IMPROVEMENT FUND CAPITAL ADDITIONS

	Proposed 2017	Adopted 2017
Information Technology		
Replace computers, laptops, monitors, tablets, printers and related software	20,000	20,000
Replace two network switches	9,000	9,000
Implement offsite backup solution	10,000	10,000
Information Technology Total	39,000	39,000
Administrative		
No items requested	0	0
Administrative Total	0	0
Court		
No items requested	0	0
Court Total	0	0
Media		
No items requested	0	0
Media Total	0	0
Health		
Two pickup trucks with bed liners and hazard lights	64,000	64,000
One 14 foot dump trailer	10,000	10,000
One 32" walk behind mower	3,800	3,800
Health Total	77,800	77,800

03 - CAPITAL IMPROVEMENT FUND CAPITAL ADDITIONS

	Proposed 2017	Adopted 2017
Public Works		
Streets		
One 2.5 ton dump truck with snow plow, salt spreader, calcium chloride tank, and hazard lights for dump truck	136,000	136,000
One pickup truck with bed liners and hazard lights	32,000	32,000
One BobCat Pavement Planer	20,000	20,000
Clean and paint all buildings at City Garage complex	48,000	48,000
Streets Sub-Total	236,000	236,000
Building		
Public Works counter and office remodeling at City Hall	0	48,000
Public Works data-base backup system	5,000	5,000
Building Sub-Total	5,000	53,000
Engineering		
Bockrath-Wiese House hazard mitigation and repairs	0	46,800
Engineering Sub-Total	0	46,800
Public Works Total	241,000	335,800
Police		
Vehicles		
Eight Police vehicles with related equipment at $28,000 each	224,000	224,000
Two new Tahoe police vehicles and related equipment	70,000	70,000
Radio/Emergency equipment installation on ten new vehicles	16,000	16,000
Police Vehicle Sub-Total	310,000	310,000
Miscellaneous Items		
HVAC system upgrade	24,800	24,800
Liberty Interview server replacement	3,000	3,000
Office reconfiguration and work station update	15,000	15,000
Replace mobile computers/printers and related equipment	45,000	45,000
Replace desktop computers and related equipment	14,000	14,000
Replace and upgrade security cameras and equipment	10,000	10,000
Networking infrastructure upgrade	20,000	20,000
Replace servers and related equipment	5,000	5,000
Computer system backup and related security software	5,000	5,000
Purchase two mobile speed monitoring units	0	10,500
Continue Access door locks and proximity cards	10,000	10,000
Police Miscellaneous Sub-Total	151,800	162,300
Police Total	461,800	472,300
Grand Total	**819,600**	**924,900**

		2016	2,017
Account 0329 – Building Maintenance & Supplies	Total	58,600	61,000

Janitorial Supplies for City Hall, Government Building and City Garage
HVAC maintenance and repairs at City Hall, Government Building and City Garage buildings: includes furnace filters, belts, dryers, Freon, compressors, motors, bearings, replace emergency light batteries, roof repairs, etc. …
Overhead door maintenance and repairs at City Garage, as needed
Garage hoist maintenance and repairs, fuel pump maintenance and repairs, waste disposal, as needed yearly …
Carpet cleaning and new entryway mats; elevator maintenance contract
Miscellaneous building maintenance materials: lumber, nails, paint, glass, sealants, electrical and plumbing supplies, Christmas / Seasonal Decorations ...
3 each Office Chairs at $200/ea. = $600 (New 2017) for City Garage

Account 0330 – Equipment Repairs – Vehicles	Total	130,000	130,000

Includes maintenance of major equipment and trucks for the Street Department, minor pieces of equipment for the Street Department, Police Department cars, motorcycles, and equipment, Health Department, Park Department, and Golf Course vehicles and equipment … also old police vehicles that are now PW Inspector
Miscellaneous automotive parts and supplies, brakes, tune-up kits, tools,
Tire repairs, purchase, service; dealer parts & service; small engine parts & service; heavy equipment parts, service & supplies; street sweeper parts & supplies; transmission parts, service & supplies; radiator and A/C service …
Miscellaneous: mufflers, exhaust work, batteries, lights, radio work, upholstery, glass, parts, service and supplies, lubricants and fluids, towing, etc. …
Major equipment and vehicle repairs, accident repairs …
Emission testing per Department of Natural Resources Clean air
Diagnostic equipment and software system updates …

Account 0333 – Materials & Supplies	Total	110,000	110,000
Concrete Pavement Replacement: Ready mix, rock, expansion joint material, reinforcing steel, wire mesh, curing compound, plastic, dowels, etc. …		70,000	70,000
Mudjacking: Portland Cement and Aggregate Lime …		3,000	3,000
Asphalt Pavement Replacement: 200 tons surface mix, 200 tons curb mix, 150 tons black-crete, 1,500 gallons SS1H asphalt emulsion, other asphalt products …		18,000	16,000
Crack sealing: 10,000 gallons Asphalt emulsion, 100 tons rock …		5,000	5,000
Replacement chain saws, vibrators, minor tools and equipment …		1,000	3,000

		2016	2,017
Account 0333 – Materials & Supplies (con't)			
Miscellaneous: grass seed, fertilizer and sod; sand for sandblasting, lumber, nails, plastic, concrete saw blades and drill bits, traffic safety flagging, lights, rain gear, batteries, etc., barricades, barrels, lights, hand tools (brooms, shovels, rakes, etc.), ice (summer water coolers), fence materials, concrete form materials, pins, tie-rods, etc.; equipment and tool rental ...		13,000	13,000
Account 0334 – Street Markings	Total	13,000	9,000
Channel posts, street name posts, die cutters for numbers			
Sign faces - reflective material, sign blanks – aluminum, sign brackets			
Street marking paint, reflective marking beads			
Construction/traffic control signs			
Miscellaneous materials (delineators, batteries, tape, keel, traffic count tape, spray traffic paint for marking)			
Seasonal (Christmas/Spring/Summer/Fall) decorations & banners on North Lindbergh, rue St. Francois, Civic Centers and other locations …			
Adopt-A-Street Program …			
Account 0339 – Ice/Snow Removal	Total	0	149,130
Salt: 2,000 Tons @ $68.19/Ton = $136,380		0	136,380
Calcium Chloride: 15,000 Gals. @ $0.85/Gal.= $12,750		0	12,750
Account 0350 – Professional Services	Total	589,928	922,418
Audit		2,000	2,050
Bank Fees		600	600
REJIS Commission GANet Subscription & Service		4,000	4,000
GIS (Geographic Information System) Web-Based Mapping Project …		60,000	60,000
General Engineering and Design Services		20,000	20,000
St. Anthony Lane Bridge over Fountain Creek (replacement) – Right-Of-Way Acquisition		10,000	0
RFP's for Redevelopment Projects		5,000	5,000
Annexation Projects (Research, Maps, Copying Costs, Application Fees)		5,000	5,000
Old Town and N. Hwy 67 Enhancement Maintenance / Mowing …		60,000	60,000
I-270 Mowing		25,000	25,000
East-West Gateway Grant Applications		10,000	10,000
Troubleshooting & repairs to Electrical & HVAC Energy Controls at various city buildings (service, upgrades, repairs, inspections)		25,000	25,000
Emergency Asbestos Removal by Contractor (all City buildings)		15,000	15,000
Plaques for "Walk Through History"		3,000	3,000
Consulting services: PW special projects, etc. …		4,000	4,000

		2016	2,017
Account 0350 – Professional Services (con't)			
Cleanup, repair and/or demolition of derelict/dangerous residential/commercial properties, including graffiti removal, trash/debris/junk removal, grass/weed cutting, tree/brush/vegetation removal, various landscaping/building repairs/work as needed … by the City and/by Contractor (i.e. Annual Handyman Services contractor, Annual Tree Services contractor, etc.) …		35,000	35,000
St. Anthony Lane bridge replacement … this is an 80% grant reimbursement project … construction in 2017 budget year… ($371,140 grant/$92,785 city)		0	463,925
Records & Document Destruction		500	500
North Lafayette Street Reconstruction - Phase I ROW acquisition … this is an 80% grant reimbursement project … construction in 2018 budget year… ($65,260 grant/$16,315 city)		140,756	81,575
North Lafayette Street Reconstruction - Phase II ROW acquisition … this is an 80% grant reimbursement project … construction in 2018 budget year… ($65,260 grant/$16,315 city)		138,879	81,575
Pedestrian Signal Replacement on Derhake at Robinwood Elementary School … this is an 80% grant reimbursement project . . . Construction in 2018 budget year… ($12,954 grant/$3,239 city)		16,193	16,193
Bike & Pedestrian Master Plan … a joint project with Trailnet as the grantee… ($40,000 Trailnet/$10,000 City, $5,000 in '16, $5,000 in '17)		10,000	5,000
Account 0351 – Street Lighting	Total	0	555,000
Average annual usage		0	480,000
New and Replacement Streetlights in areas as needed		0	20,000
Clean and Paint 75ea. Decorative Street Lights on N. Hwy 67		0	18,000
Clean and Paint 70ea. Decorative Street Lights on rue St. Francois		0	17,000
Decorative Streetlight Repair/Replacement – N. Lindbergh, N. Hwy. 67, Old Town, Paddock Estates, and other areas		0	20,000
Account 0352 – Street Contracts	Total	1,650,000	1,650,000
Slurry Seal Maintenance Work		850,000	850,000
Concrete Pavement Replacement Work		500,000	500,000
Major Street Repairs and Asphalt Overlay		300,000	300,000
Account 0353 – Bridge Repair & Maintenance	Total	60,000	60,000
Miscellaneous Bridge Repairs by Contractor		50,000	50,000
Bridge Repairs/Maintenance by City		10,000	10,000

Capital Improvement Fund Budget: 2017

		2016	2,017
Account 0354 – Sidewalk Replacement	Total	150,000	150,000
Sidewalk Program by Contractor		145,000	145,000
Tree Removals		5,000	5,000
Account 0355 – Debt Payment	Total	328,000	228,000
Principal and Interest on the 2011 COPS Bond Issue			
Account 0361 – Capital Additions	Total	743,800	924,900
Account 036136 – Capital Additions/Information Technology	Total	41,000	39,000
Replace computers, laptops, monitors, tablets, printers and related software in various departments			20,000
Replace two network switches			9,000
Implement offsite backup solution0			10,000
Prior year capital additions		41,000	0
Account 036140 – Capital Additions/Administration	Total	0	0
Prior year capital additions		0	0
Account 036141 – Capital Additions/Court	Total	0	0
Prior year capital additions		0	0
Account 036170 – Capital Additions/Media	Total	0	0
Prior year capital additions		0	0
Account 036142 – Capital Additions/Health Department	Total	32,000	77,800
1 each 32" Walk Behind Mower		0	3,800
1 each 14 foot Dump Trailer		0	10,000
1 Pickup Truck, 3/4 ton, to replace either H-8 (2005 Chevy w/85,000 miles) to include bed liners and hazard light bar …		0	32,000
1 each Additional Pickup Truck including bed liners and hazard light bar …		0	32,000
Prior year capital additions		32,000	0

Capital Improvement Fund Budget: 2017

		2016	2,017
Account 036148 – Capital Additions/Public Works	Total	251,800	335,800
Streets	S/T	157,000	236,000
1 each 2.5 Ton Dump Truck with salt spreader, calcium chloride tanks, snow plow and frame with hazard lights … to replace S-20 (2002 GMC)		0	136,000
1 each Pick-up Truck, 3/4 ton, to replace S-8 (2006 Chevy) to include bedliner and hazard light bar …		0	32,000
1 each BobCat Pavement Planer to replace existing S-160 (2002)		0	20,000
Clean and Paint all buildings at City Garage Complex		0	48,000
Prior year capital additions		157,000	0
Engineering	S/T	46,800	46,800
Bockrath - Wiese House hazard mitigation and repairs (removal of standing water in the basement, mold remediation, cleaning/sand blasting the interior stone foundation wall, re-grout foundation wall, waterproof foundation wall, install an interior drainage system and sump-pump) ...		0	46,800
Prior year capital additions		46,800	0
Building	S/T	48,000	53,000
Public Works counter and office remodeling at City Hall …			48,000
PW Data-Base Back-up System at Government Building for disaster recovery …		0	5,000
Prior year capital additions		48,000	0

Account 036149 – Capital Additions/Police	Total	419,000	472,300
Vehicles	S/T	300,000	310,000
Eight Police vehicles and related equipment at $28,000 each		0	224,000
Two new Chevrolet Tahoe Police vehicles and related equipment at $35,000 each		0	70,000
Radio/emergency equipment installation for ten vehicles at $1,600 each		0	16,000
Prior year capital additions		300,000	0
Miscellaneous	S/T	119,000	162,300
HVAC system upgrade		0	24,800
Liberty Interview server replacement		0	3,000
Office reconfigure and work station update		0	15,000
Replace mobile computers/printers and related equipment		0	45,000
Replace desktop computers and related items		0	14,000
Replace and upgrade security cameras and equipment		0	10,000
Networking infrastructure upgrade		0	20,000
Replace servers, laptops and related equipment		0	5,000
Computer systems backup and related security software		0	5,000
Purchase two mobile speed monitoring units		0	10,500
Access door locks and proximity cards upgrade		0	10,000
Prior year capital additions		119,000	0

09 - PARK IMPROVEMENT FUND

	Actual 2015	Budget 2016	Proposed 2017	Adopted 2017
REVENUE				
Park Improvement Sales Tax	3,278,362	3,400,000	3,500,000	3,500,000
Interest	0	0	0	0
Miscellaneous Revenue	88,875	26,400	531,400	531,400
Total Budgeted Revenue	3,367,237	3,426,400	4,031,400	4,031,400
Less Total Budgeted Expenditure			(4,037,187)	(4,282,245)
Equal Revenue Over/(Under) Expenditure			(5,787)	(250,845)
Plus Estimated Beginning Fund Balance			1,677,140	1,677,140
Equal Estimated Ending Fund Balance			1,671,353	1,426,295
EXPENDITURES				
0910-Salaries	872,716	897,559	1,019,281	1,002,614
0913-Employee Benefits	371,840	373,153	389,781	386,006
0914-Residency Incentive Program	13,950	15,600	15,600	15,600
0921-Uniforms & Allowances	16,291	19,125	19,125	19,125
0927-Gas & Oil	49,144	64,000	64,000	64,000
0928-Merchandise	48,911	67,250	54,750	54,750
0929-Bldg., Maint., & Supplies	136,803	140,900	156,850	156,850
0930-Maintenance/Supplies	111,973	180,450	112,850	112,850
0931-Recreation Supplies	34,975	37,500	44,600	44,600
0932-Office Supplies & Maint.	25,869	40,800	40,800	40,800
0933-Materials & Supplies	107,980	131,950	148,750	148,750
0942-Dues, Travel, Training	11,170	13,660	13,660	13,660
0950-Professional Services	181,296	249,690	240,240	240,240
0951-Pavement Repairs	21,479	10,000	20,000	20,000
0954-Publicity	9,185	12,300	16,300	16,300
0955-Debt Payment	578,107	577,000	675,000	675,000
0956-Insurance	0	0	60,000	60,000
0961-Capital Additions	784,323	510,350	945,600	1,211,100
Total	3,376,012	3,341,287	4,037,187	4,282,245
PERSONNEL SERVICES				
Full-time		847,559	839,155	839,155
Part-time		0	130,126	130,126
Overtime		50,000	50,000	33,333
Total Personnel Services		897,559	1,019,281	1,002,614

PERSONNEL SCHEDULE

Park Maintenance - full-time	
Park Superintendent	1.00
Class "A" Foreman	1.00
Forester I	1.00
Class "A" Person (5)	5.00
Class "B" Person (3)	4.00
Class "C" Person (6)	5.00
Total	17.00
Total Personnel	22.55

Part-time and Seasonal Staff	
Park Maint. p/t	1.45
Park Maint. - Summer Laborers p/t	4.10
Total	5.55
Full-time	17.00
Full-time Equivalent (Part-time)	5.55

09 - PARK IMPROVEMENT FUND CAPITAL ADDITIONS

	Proposed 2017	Adopted 2017
Theater		
No items requested	0	0
Theater Total	0	0
Golf Course		
Golf Course Equipment		
Ventrac 4500Y articulated tractor	32,000	0
Two Jacobsen Eclipse 322 attachments	7,500	5,000
Total Golf Course Equipment	39,500	5,000
Golf Course Improvements		
Various tee, bunker and fairway renovations	5,000	5,000
Total Golf Course Improvements	5,000	5,000
Total Golf Course Equipment and Improvements	44,500	10,000
James J. Eagan Center		
Swimsuit dryer for men's locker room	2,200	2,200
Automatic vacuum for Indoor pool	5,500	5,500
Spectator bleachers for Ice Rink	8,000	8,000
Installation of surveillance camera in swimming pool area	3,500	3,500
Office renovations	22,000	22,000
Replace lower level flooring with asbestos abatement	36,000	36,000
James J. Eagan Center Total	77,200	77,200
John F. Kennedy Center		
Installation of surveillance camera in gymnasium	5,000	5,000
John F. Kennedy Center Total	5,000	5,000
Bangert Pool		
No items requested	0	0
Bangert Pool Total	0	0

09 - PARK IMPROVEMENT FUND CAPITAL ADDITIONS

	Proposed 2017	Adopted 2017
Koch Park Aquatic Center		
Repair and replace four skimmers in main activity pool	24,000	24,000
Koch Park Aquatic Center Total	24,000	24,000
Parks Equipment		
Replace pick-up truck with accessories and radio installation	25,000	25,000
Replace pick-up truck with accessories and radio installation	27,000	27,000
New walk behind aerator	3,400	3,400
Replace damaged rototiller	4,000	4,000
Replace 3 mowers	27,000	27,000
Replace Bobcat with tracks, bucket and brush mower	40,000	40,000
Field and brush mower/cutter	4,000	4,000
Infield groomer (Diamond Pro) for St. Ferdinand Park ballfields	17,000	17,000
Replace MIG welder	2,200	2,200
Heavy duty commercial debris vacuum	3,000	3,000
Parks Equipment Total	152,600	152,600
Parks Improvements		
Install drainage system on field #3 at Koch Park	2,200	2,200
Install drainage system on sand volleyball courts at St. Ferdinand Park	7,700	7,700
Replace water fountain in St. Ferdinand Park lake	10,000	10,000
Dredge and clean St. Ferdinand Park lake	0	300,000
Replace fencing and gates around Koch field #1	35,000	35,000
Replace outfield fence on Koch field #1	7,400	7,400
Replace fencing on Koch fields (2, 3, 4, 5) along Charbonier Road	14,000	14,000
Replace ballfield backstops at Koch #1 and Dunegant #3	14,000	14,000
St. Louis County Municipal Park Grant to construct Phase 1 of the Manion Park Master Plan (reimbursement up to $525,000)	552,000	552,000
Parks Improvements Total	642,300	942,300
Parks Equipment and Improvements Total	794,900	1,094,900
Grand Total	**945,600**	**1,211,100**

Park Improvement Fund Budget: 2017

		2016	2017
Account 0910 - Salaries			
Full-time employees			
Park Superintendent		1	1
Class "A" Foreman		1	1
Forester I		1	1
Class "A" Person		5	5
Class "B" Person		4	4
Class "C" Person		5	5
Total full-time employees		17	17
Part-time Employees			
Park Maintenance (Part-time):			
29 hours x 52 weeks = 1,508 hours x 2 Laborers = 3,016 hours			
3,016 hours x 2nd year rate	hours	3016	3,016
Park Maintenance (Seasonal):			
40 hours x 15 weeks = 600 hours x 11 Laborers = 6,600 hours			
6,600 hours x 2nd year rate	hours	6,600	6,600
32 hours x 30 weeks = 960 hours x 2 Laborers = 1,920 hours			
1,920 hours x 2nd year rate	hours	1,920	1,920
Total part-time hours		11,536	11,536
Overtime		$50,000	$33,333
Account 0913 - Employee Benefits			
F.I.C.A., Pension, Medical, Dental, Life Insurance, Long Term Disability			
Account 0914 - Residency Incentive Program	Total	15,600	15,600
Thirteen employees at $100 per month			
Account 0921 - Uniforms and Allowances	Total	19,125	19,125
44 Centers	Sub	3,950	3,950
Full-time Custodial Uniforms (4 employees @ $300)		1,200	1,200
Staff T-Shirts/Polo Shirts		2,000	2,000
JJE Lifeguard T-Shirts and Swimsuits		750	750
45 Summer Playground	Sub	975	975
Staff T-Shirts		975	975
46 Bangert Pool	Sub	2,000	2,000
Staff T-Shirts		700	700
Swimsuits		1,300	1,300
56 Koch Pool	Sub	3,500	3,500
Staff T-Shirts		900	900
Swimsuits		2,600	2,600

Park Improvement Fund Budget: 2017		2016	2017
47 Parks	Sub	8,700	8,700
Full-time Park Uniforms (17 employees @ $300)		5,100	5,100
Staff T-Shirts (seasonal staff)		1,650	1,650
Ranger Uniforms		1,950	1,950
Account 0927 - Gas and Oil	Total	64,000	64,000
44 Centers - Propane for Zamboni and gasoline/diesel for various equipment		3,000	3,000
47 Parks		61,000	61,000
Account 0928 - Merchandise	Total	67,250	54,750
40 Skate Shop - Resale of skate and pro shop items	Sub	500	500
44 Centers	Sub	23,750	19,250
Resale items for Customer Service Desk		1,000	500
Beer for facility functions and concessions		1,000	500
Beverages for Rink concessions and vending machines		20,000	17,000
Special city sponsored or theatrical events		1,000	500
Miscellaneous supplies		750	750
47 Parks	Sub	43,000	35,000
St. Ferdinand Park and Koch Park Cart operations		5,000	3,000
Bangert Park and Pool		9,000	7,000
Koch Park and Pool		29,000	25,000
Account 0929 - Building Maintenance and Supplies	Total	140,900	156,850
Water treatment and cooling-tower treatment		10,000	10,000
Backflow preventer inspection and repair for JJE and JFK		1,200	1,200
Elevator inspection, service and maintenance		2,500	2,500
Electrical and plumbing maintenance and supplies		4,500	4,500
Miscellaneous building maintenance and hardware		5,000	5,000
Pool and spa chemicals and supplies		5,000	5,000
HVAC maintenance		5,000	5,000
Fire extinguisher equipment, replacement & maintenance		2,000	2,000
Dowtherm, paint, custodial supplies, pest control		8,300	8,300
Spectator shielding and dasher board equipment for Rink		2,000	2,000
Wind tarps for Rink		2,000	2,000
Repair, replacement and service on windows and window accessories		5,000	5,000
Zamboni supplies and blade sharpening/replacement		2,000	2,000
Water softener materials		1,000	1,000
Replacement tables and chairs for JJE and JFK		10,000	10,000
Hydro-flushing of sanitary lines at JJE and JFK		2,500	2,500
Replacement of broken and damaged pool filter elements and covers		2,000	2,000
Fitness Center equipment, maintenance and supplies		10,000	10,000

		2016	2017
Gymnasium equipment, repairs and supplies		1,600	1,600
Roof repair and maintenance		7,500	7,500
Repair, troubleshoot and service fire alarm system		4,000	4,000
Security video system maintenance, materials and supplies		2,500	2,500
Nature Lodge maintenance, repairs and supplies		4,000	4,000
Asbestos abatement		25,000	25,000
Water slide and slide tower maintenance and repairs		0	5,000
Beer cooler (to eliminate annual Beer Cooler Lease payment)		0	1,800
Reception desk for JFK Fitness Center		0	1,000
Relocating existing surveillance camera from JFK to Bangert Pool		0	3,500
Install glass basketball backboards (JFK-2, JJE-4) with height adjustors		0	11,250
Install protective netting on Ice Rink		0	3,000
StepOne Recumbent Stepper in JJE Fitness Center		0	5,400
Back Extension Machine for JFK Fitness Center		0	1,300
Various fitness/basketball equipment, camera relocation, etc.		16,300	0
Account 0930 - Maintenance and Supplies	Total	180,450	112,850
46 Bangert Pool	Sub	35,725	24,925
Miscellaneous hardware, paint, caulk		1,600	1,600
Plumbing maintenance materials & supplies		1,200	1,200
Hydro flushing of sanitary lines		750	750
Electrical maintenance and supplies		1,250	1,250
Janitorial supplies, locker maintenance, pest control		1,325	1,325
First-aid supplies		400	400
Pool equipment and supplies, test kits, deep water bracelets		1,900	1,900
Rescue and staff training supplies		600	600
Office supplies		100	100
Pool deck lounges		2,400	2,400
Pump and chemical feeding system maintenance		1,400	1,400
Swim Team supplies		500	500
U.V. system maintenance and supplies		2,500	2,500
Supplies and maintenance for filtration and chlorination systems		4,000	4,000
Replace/repair 3 meter diving board system		0	5,000
Replacement of valves, leak repairs, water wheelchair, etc.		15,800	0
56 Koch Pool	Sub	95,325	38,525
Miscellaneous hardware, paint, caulk		2,000	2,000
Plumbing maintenance and supplies		1,200	1,200
Hydro flushing of sanitary lines		750	750
Backflow preventer inspection and repair		1,000	1,000
Electrical maintenance and supplies		500	500
Miscellaneous janitorial supplies		1,950	1,950
First-aid supplies		400	400

		2016	2017
Locker maintenance		200	200
Pool test kits		500	500
Pest control		125	125
Pool equipment and supplies		1,200	1,200
Rescue and staff training supplies		900	900
Office supplies		100	100
Deep water bracelets		1,000	1,000
Pool deck lounges		2,400	2,400
Pump and chemical feeding system maintenance		1,400	1,400
Otter Slide maintenance		500	500
Water feature maintenance		1,000	1,000
Lily Pad Area maintenance and supplies		3,400	3,400
Lazy River tube replacement		1,000	1,000
Supplies and maintenance for filtration and chlorination systems		5,000	5,000
Replace broken filter baskets		2,500	2,500
Replace sight-obstructing, high maintenance vegetation with landscaping rock		2,000	2,000
Four (4) new peristaltic pumps with double heads		0	3,000
Two (2) new CO2 feeders		0	2,500
Portable pool vacuum with accessories		0	2,000
Various replacement parts and repair work, water wheelchair		64,300	0
47 Parks	Sub	49,400	49,400
Equipment repair and various supplies		35,000	35,000
Backflow preventer inspection and repair for Parks and Trail		1,400	1,400
Maintenance and repairs for 2001 Showmobile		10,000	10,000
Water feature repairs and maintenance at St. Ferdinand Lake		2,000	2,000
Fire extinguisher equipment, replacement & maintenance		1,000	1,000
Account 0931 - Recreation Supplies	Total	37,500	44,600
44 Centers	Sub	32,000	34,100
Splish-Splash Summer Bash		1,000	1,000
Project Lift-Off		1,000	1,000
Halloween Event		1,000	1,000
Party on the Ice Event		1,000	1,000
Supplies for city sponsored leagues		15,000	15,000
Miscellaneous supplies for classes, programs, activities and special events		6,000	6,000
Miscellaneous athletic and recreation equipment		2,000	2,000
Replace damaged and unusable rental ice skates		5,000	5,000
Replace damaged/torn gymnastic tumbling matts		0	2,100
45 Summer Playground	Sub	5,500	10,500

Park Improvement Fund Budget: 2017

		2016	2017
Account 0932 - Office Supplies and Printing	Total	40,800	40,800
44 Centers	Sub	10,800	10,800
Printing and office supplies		2,200	2,200
RecPro software subscription service		7,000	7,000
Parks & Recreation receipts		1,600	1,600
47 Parks	Sub	30,000	30,000
Printing and office supplies		7,000	7,000
Photo ID supplies		18,000	18,000
Video server surveillance software upgrade		5000	5,000
Account 0933 - Materials and Supplies	Total	131,950	148,750
46 Bangert Pool	Sub	20,300	23,500
Sodium Hypochloride		13,000	3,000
Co2		4,000	4,000
Muriatic Acid		250	250
Cyanuric Acid		600	600
Calcium Hypochloride		800	14,000
Algaecide		500	500
Filter Aids		500	500
Sodium Bicarbonate		500	500
Chlorine (for Splash Pad)		150	150
47 Parks	Sub	90,500	104,100
Dirt for ball fields		6,500	6,500
Sports equipment		1,000	1,000
Playground and pavilion parts and equipment		20,000	30,000
Playground and landscaping mulch		10,000	10,000
Field marking supplies		3,000	3,000
Field and pavilion lighting supplies		2,000	2,000
Top caps for outfield fencing		1,500	1,500
Building and construction materials		12,000	12,000
Maintenance supplies and materials for park facilities		5,000	5,000
Sand for ball fields and volleyball pits		4,000	4,000
Landscaping supplies		4,000	4,000
Chemical and cleaning supplies		4,500	4,500
Metal products		3,000	3,000
Calcium Chloride		3,000	3,000
Fish for stocking St. Ferdinand lake		4,000	4,000
Trash cans and lids		500	500
Picnic table and park bench parts and materials		500	500
Park restroom supplies		1,000	1,000
Memorial trees		2,000	2,000
Miscellaneous materials, supplies and small tools		3,000	3,000

		2016	2017
Beer coolers at St. Ferdinand and Koch (to eliminate the annual Beer Cooler Lease payment) - $1,800 per cooler		0	3,600
56 Koch Pool	Sub	21,150	21,150
Sodium Hypochloride		12,000	12,000
Co2		5,000	5,000
Muriatic Acid		250	250
Cyanuric Acid		600	600
Calcium Hypochloride		800	800
Algaecide		500	500
Filter Aids		500	500
Sodium Bicarbonate		500	500
Other chemicals and supplies as needed		1,000	1,000
Account 0942 - Dues, Travel and Training	Total	13,660	13,660
44 Centers	Sub	7,500	7,500
Auto allowance		3,500	3,500
Aquatic Facility Operator and Certified Pool/Spa Operator certification fees and additional aquatic professional courses		1,200	1,200
Municipal Swim League membership dues		800	800
Miscellaneous dues, training, and re-certifications		2,000	2,000
45 Summer Playground	Sub	960	960
47 Parks	Sub	5,200	5,200
Missouri Park and Recreation Assn. membership dues and convention fee		3,500	3,500
Certified Park and Recreation Professional (CPRP) certification fees		900	900
Pesticide applicator's license		100	100
Metro Park and Recreation Directors and Board meetings/seminars		700	700
Account 0950 - Professional Services	Total	249,690	240,240
01 Miscellaneous	Sub	14,000	14,050
Tree Planting		7,500	7,500
Audit		2,000	2,050
Inclusion Coordinator		4,500	4,500
02 Bank Fees	Sub	10,000	10,000

Park Improvement Fund Budget: 2017		2016	2017
44 Centers	Sub	21,290	19,290
Liquor licenses - all facilities		3,500	3,500
Operating Permits - St. Ferdinand, Bangert, Koch, JJE		800	800
Beer Cooler Lease (JJE, Koch, St. Ferdinand)		2,000	0
Ice Machine Rental - St. Ferdinand, Bangert, Koch		2,150	2,150
Hepatitis "A" Vaccinations (for employees)		1,700	1,700
JJE Pool Operational Safety Audit		1,200	1,200
Charter converter boxes for fitness centers		1,440	1,440
Professional fees for pool operation		1,500	1,500
Contracts for DJ services		2,000	2,000
RecPro IP Charge Card processing annual fee		800	800
Contracts for program instructors and services		4,200	4,200
46 Bangert Pool	Sub	2,400	2,400
Operational Safety Audit		900	900
Professional fees for pool operation		1,500	1,500
56 Koch Pool	Sub	2,400	2,400
Operational Safety Audit		900	900
Professional fees for pool operation		1,500	1,500
47 Parks	Sub	199,600	192,100
Grinding service and mulch/chip removal from Koch Park		20,000	20,000
Tree trimming and tree removal		75,000	75,000
Ash tree service due to Emerald Ash Borer blight		25,000	25,000
Tree trimming at the golf course		2,500	2,500
Electric repair and lighting for pavilions and ball fields		15,000	15,000
Fireworks and related items		28,000	28,000
Rental and service of portable toilets		5,000	5,000
Music copyright fees (ASCAP, SESAC, etc.)		2,200	2,200
Monitoring service for remote alarm devices in the parks		1,000	1,000
Service and Product Maintenance Agreement on surveillance cameras		8,000	8,000
Band concerts		900	900
St. Ferdinand Park lake pump cleaning		500	500
Boom-truck inspection		1,000	1,000
Repair Sunset Greenway Trail		7,500	0
St. Louis County Municipal Park Planning Grant: Reimbursed at 80% for the first $8,000 ($6,400 grant).		8,000	8,000
Account 0951 - Parking Lot, Driveway, and Walkway Repairs	Total	10,000	20,000
Miscellaneous concrete repairs on dangerous and hazardous areas		10,000	10,000
Removal of trip hazards and uneven/cracking sections of concrete on pool decks and walkways		0	10,000

Park Improvement Fund Budget: 2017

		2016	2017
Account 0954 - Publicity	Total	12,300	16,300
Parks and Recreation Department guides/brochures		9,000	13,000
Miscellaneous advertising media, tri-folds, posters, fliers, etc.		3,300	3,300
Account 0955 - Debt Service	Total	577,000	675,000
Principal and interest on the 2011 COPS Bond Issue			
Account 0956 - Insurance	Total	0	60,000
Workers Compensation Insurance		0	60,000
Account 0961 - Capital Additions	Total	510,350	1,211,100
Florissant Civic Center Theater	Sub	2,850	0
No items requested			0
44 James J. Eagan Center	Sub	17,000	77,200
Swimsuit dryer for the men's locker room			2,200
Automatic vacuum for Indoor Pool			5,500
Spectator bleachers for Ice Rink			8,000
Installation of surveillance camera in Swimming Pool area			3,500
Office renovations (replace carpeting and 1994 workstations) to improve customer service and provide safer working environment			22,000
Replace lower level flooring (includes meeting room, lobby, hallway and restroom tiles). Asbestos abatement required.			36,000
44 John F. Kennedy Center	Sub	12,000	5,000
Installation of surveillance camera in Gymnasium			5,000
46 Bangert Pool	Sub	19,000	0
			0
56 Koch Park Aquatic Center	Sub	24,000	24,000
Repair and replace four (4) skimmers in Main Activity Pool			24,000
06 Golf Course Equipment	Sub	8,000	5,000
Two (2) Jacobsen Eclipse 322 attachments - $2,500 each			5,000
06 Golf Course Improvements	Sub	15,500	5,000
Various tee, bunker and fairway renovations			5,000

Park Improvement Fund Budget: 2017

Account 0961 - Capital Additions (con't)		2016	2017
47 Parks Equipment	Sub	157,000	152,600
Replace 2000 (P-23) pickup truck, including accessories and radio installation			25,000
Replace 2006 (R-2) pickup truck, including accessories, radio installation and emergency equipment			27,000
New walk-behind aerator			3,400
Replace damaged 2002 rototiller with new rototiller			4,000
Replace 2011 mower (PT-31) with new 72" zero-turn mower (2,057 hours)			10,000
Replace 2010 mower (PT-28) with new 60" zero-turn mower (1,852 hours)			10,000
Replace 2006 mower (PT-35) with walk-behind mower (for steep inclines, etc)			7,000
Replace 2003 (PT-32) New Bobcat with with tracks, bucket with teeth, brush mower, less trade-in. (870 hours)			40,000
Field and brush mower/cutter			4,000
Infield groomer (Diamond Pro) for ballfields at St. Ferdinand Park			17,000
Replace unusable welder with new MIG welder			2,200
Heavy-duty/commercial debris vacuum			3,000
47 Park Improvements	Sub	255,000	942,300
Install drainage system on ballfield #3 at Koch Park			2,200
Install drainage system on sand volleyball courts at St. Ferdinand Park			7,700
Replace water fountain in St. Ferdinand Park Lake			10,000
Dredge and clean St. Ferdinand Park lake			300,000
Replace fencing and gates around Koch Field #1			35,000
Replace outfield fence on Koch Field #1			7,400
Replace fencing on Koch Park fields (2,3,4,5) along Charbonier Road			14,000
Replace ballfield backstops (Koch Park #5, Dunegant #3) - $7,000 each			14,000
St. Louis County Municipal Park Grant - $552,000: To construct Phase 1 of the Manion Park Master Plan. Project will include a new parking lot, walkways, horseshoe pits, and other small park amenities. Project funds are reimbursed by the Park Grant Commission up to $525,000. Net expense $27,000.			552,000

08 - STREET FUND	Actual 2015	Budget 2016	Proposed 2017	Adopted 2017
REVENUE				
Revenue	0	0	1,500,000	1,500,000
Interest	0	0	0	0
Miscellaneous Revenue	0	0	0	0
Total Budgeted Revenue	0	0	1,500,000	1,500,000
Less Total Budgeted Expenditure			(1,700,000)	(1,700,000)
Equal Revenue Over/(Under) Expenditure			(200,000)	(200,000)
Plus Estimated Beginning Fund Balance			200,000	200,000
Equal Estimated Ending Fund Balance			0	0
EXPENDITURES				
0852-Street Contracts	0	0	1,700,000	1,700,000
Total	0	0	1,700,000	1,700,000

Street Fund Budget: 2017

		2016	2017
Account 0852 - Street Contracts	Total	0	1,700,000

Street replacement, repairs and maintenance.

04 - SEWER LATERAL FUND REVENUE	Actual 2015	Budget 2016	Proposed 2017	Adopted 2017
Revenue	508,652	500,000	500,000	500,000
Interest	6,041	5,000	5,000	5,000
Miscellaneous Revenue	200	0	0	0
Total Budgeted Revenue	514,893	505,000	505,000	505,000
Less Total Budgeted Expenditure			(671,450)	(671,450)
Equal Revenue Over/(Under) Expenditure			(166,450)	(166,450)
Plus Estimated Beginning Fund Balance			1,886,232	1,886,232
Equal Estimated Ending Fund Balance			1,719,782	1,719,782

EXPENDITURES				
8021-Uniforms	900	900	900	900
8027-Gasoline	11,708	15,000	15,000	15,000
8030-Equipment Repair	12,195	14,000	14,000	14,000
8032-Office Supplies & Maint.	2,100	2,500	2,500	2,500
8033-Materials and Supplies	30,448	38,500	38,000	38,000
8042-Dues, Travel & Training	1,523	2,000	2,000	2,000
8050-Professional Service	560,132	577,783	574,050	574,050
8055-Insurance, Fire & Liability	20,000	25,000	25,000	25,000
8061-Capital Additions	119,061	25,000	0	0
Total	758,067	700,683	671,450	671,450

04 - SEWER LATERAL FUND CAPITAL ADDITIONS

Sewer Lateral Equipment				
No items requested		25,000	0	0
Total		25,000	0	0

Sewer Lateral Fund Budget: 2017

		2016	2017
Account 8021 - Uniforms	Total	900	900
Clothing allowance for all Full-time and Part-time employees		900	900
Account 8027 - Gasoline	Total	15,000	15,000
Gasoline cross charges for SLIP equipment		15,000	15,000
Account 8030 – Equipment Repair	Total	14,000	14,000

Includes maintenance equipment, miscellaneous automotive parts and supplies; brakes, tune-up kits, etc., tire repairs, purchase and service; dealer parts and service; small engine parts and service; heavy equipment parts, service and supplies; transmission parts, service and supplies; radiator and a/c service mufflers, exhaust work, batteries, lights, radio work, upholstery, glass, parts, service and supplies, lubricants and fluids, towing, etc.

Account 8032 - Printing & Office Supplies	Total	2,500	2,500
Miscellaneous office supplies (paper, printer cartridges, printing, etc.)		2,000	2,000
Misc. replacement of office equipment/furniture/cameras/video tapes ...		500	500
Account 8033 - Materials & Supplies	Total	38,500	38,000
Concrete pavement and sidewalk replacement		10,000	10,000
Asphalt pavement replacement		10,000	10,000
Various small tools & supplies …		500	1,000
Miscellaneous – top soil, grass seed, sod, lumber, sand, rock, small tools, forms, etc.		18,000	17,000
Account 8042 - Dues, Travel, Training	Total	2,000	2,000
City Engineer: Dues: Association of State Flood Plain Managers (ASFPM) - $110, American Society of Civil Engineers - $225 …		335	335
Civil Engineer-1: Dues: APWA Local and International - $169 …		169	169
Travel – Mileage for use of personal vehicle		1,496	1,496
Account 8050 - Professional Services	Total	577,783	574,050
Audit		2,000	2,050
Bank Fees		1,000	1,000
Sewer Lateral Repairs by Contractor		100,000	100,000
Video inspection fee reimbursement		32,000	32,000
Tree Removal		10,000	10,000
Computer Consultant/Maintenance/Upgrades/Supplies (CAD Programs)		5,000	5,000
Administrative Cross Charge		427,783	424,000

Sewer Lateral Fund Budget: 2017

		2016	2017
Account 8055 - Insurance	Total	25,000	25,000
General Liability, Workers Compensation, Property, etc.		25,000	25,000

Account 8061 - Capital Additions/Improvements	Total	25,000	0
Prior year capital additions		25,000	0

Acct. 04-5-80-50010 - Professional Services: Breakdown of Administrative Cross Charges
Sewer Lateral Fund Administrative Cross Charge: December 1, 2016 to November 30, 2017

Position	Wage	Benefits	Total	Percent	Cross Charge	Notes
Director of Public Works	104,957	47,231	152,187	3.13%	4,756	est. 1/4 hour per day
Administrative Assistant	42,494	19,122	61,617	6.25%	3,851	est. 1/2 hour per day
City Engineer	66,747	30,036	96,783	6.25%	6,049	est. 1/2 hour per day
Code Enforcement Off.	46,345	20,855	67,200	100.00%	67,200	assigned to program
Permit Inspection Clerk	40,435	18,196	58,631	100.00%	58,631	assigned to program
Permit Inspection Clerk	40,435	18,196	58,631	6.25%	3,664	est. 1/2 hour per day
Permit Inspection Clerk	40,435	18,196	58,631	6.25%	3,664	est. 1/2 hour per day
Multi-Inspector	57,949	26,077	84,026	6.25%	5,252	est. 1/2 hour per day
Street Superintendent	69,784	31,403	101,187	12.50%	12,648	est. 1 hour per day
Class "A" Foreman	57,658	25,946	83,604	12.50%	10,450	est. 1 hour per day
Equip. Maint. Supr.	56,514	25,431	81,945	6.25%	5,122	est. 1/2 hour per day
Equip. Maint. Mechanic	43,160	19,422	62,582	6.25%	3,911	est. 1/2 hour per day
Equip. Maint. Mechanic	41,454	18,654	60,109	6.25%	3,757	est. 1/2 hour per day
Class "A" Person	53,518	24,083	77,602	100.00%	77,602	assigned to program
Class "A" Person	53,518	24,083	77,602	2.50%	1,940	est. 1 hour per week
Class "A" Person	53,518	24,083	77,602	2.50%	1,940	est. 1 hour per week
Class "B" Person	49,650	22,342	71,992	100.00%	71,992	assigned to program
Class "B" Person	49,650	22,342	71,992	2.50%	1,800	est. 1 hour per week
Street Sweeper	48,672	21,902	70,574	2.50%	1,764	est. 1 hour per week
Class "C" Person	34,944	15,725	50,669	100.00%	50,669	assigned to program
Class "C" Person	37,107	16,698	53,805	2.50%	1,345	est. 1 hour per week
Class "C" Person	43,576	19,609	63,185	2.50%	1,580	est. 1 hour per week
Director of Finance	88,088	39,640	127,728	1.25%	1,597	est. 1/2 hour per week
Assistant Dir. of Finance	67,038	30,167	97,206	2.50%	2,430	est. 1 hour per week
Accounting Clerk	44,242	19,909	64,150	1.25%	802	est. 1/2 hour per week
Accounting Clerk	44,242	19,909	64,150	2.50%	1,604	est. 1 hour per week
Accounting Clerk	44,242	19,909	64,150	2.50%	1,604	est. 1 hour per week
Overtime	10,000	2,500	12,500	100.00%	12,500	
Residency Incentive	3,600	275	3,875	100.00%	3,875	3 assigned to program
				Total	423,999	

10 - PROPERTY REVITALIZATION REVENUE	Actual 2015	Budget 2016	Proposed 2017	Adopted 2017
Revenue	3,750	0	0	0
Interest	0	0	0	0
Total Budgeted Revenue	3,750	0	0	0
Less Total Budgeted Expenditure			(30,000)	(30,000)
Equal Revenue Over/(Under) Expenditure			(30,000)	(30,000)
Plus Estimated Beginning Fund Balance			30,000	30,000
Equal Estimated Ending Fund Balance			0	0

EXPENDITURES				
1050-Professional Service	125,616	30,000	30,000	30,000
Total	125,616	30,000	30,000	30,000

Property Revitalization Fund Budget: 2016

		2015	2016
Account 1050 - Professional Services		30,000	30,000
02 - Property Acquisition Program	Total	30,000	30,000

The Property Acquisition Program allows the City to accept assignment of certain properties within the City limits that are delinquent in real estate property taxes and have been offered for sale by the St. Louis County Collector of Revenue at least three times and the property was not sold. The City will stabilize the properties and seek to find buyers that will bring the properties up to code compliance and occupancy standards. This program is intended to foster greater community stability and strengthen the tax base of the City by preserving and improving single-family home values. Any proceeds from the sale of properties will be returned to this fund.

14 - COURT BUILDING FUND REVENUE	Actual 2015	Budget 2016	Proposed 2017	Adopted 2017
Revenue	109,013	132,000	132,000	132,000
Interest	0	0	0	0
Total Budgeted Revenue	109,013	132,000	132,000	132,000
Less Total Budgeted Expenditure			(132,000)	(132,000)
Equal Revenue Over/(Under) Expenditure			0	0
Plus Estimated Beginning Fund Balance			0	0
Equal Estimated Ending Fund Balance			0	0

EXPENDITURES				
1420-Debt Service	0	252,000	132,000	132,000
1450-Professional Service	31,109	0	0	0
1461-Capital Additions	1,135,940	0	0	0
Total	1,167,049	252,000	132,000	132,000

Court Building Fund: 2017

		2016	2017
Account 1420 - Debt Service	Total	252,000	132,000

Debt service payments utilizing the available balance from the imposition of a court cost authorized by HB 1231 and approved by Governor Nixon on July 9, 2014. HB 1231 amended RSMo 488.2245 and authorized the imposition of a court cost for each municipal ordinance violation case filed before the Municipal Division Judge or Associate Circuit Judge of the City of Florissant Municipal Court. Proceeds can be used for land assemblage and purchase, construction, maintenance, and upkeep of a municipal courthouse.

$1,170,000 was advanced from the General Fund to purchase the property at 4575 Washington Street for use as a municipal court building as authorized by Ord. #8119 adopted on February 23, 2015.

Article I. Section 105.070 - Estimates of future expenditures and personnel needs.

GENERAL FUND REVENUE

	2018	2019	2020	2021
Income	23,074,300	23,420,414	23,771,720	24,128,296
Reserve	1,803,842	1,808,119	1,813,601	1,820,332
Total	24,878,142	25,228,533	25,585,321	25,948,628

GENERAL FUND EXPENDITURES

	2018			2019			2020			2021		
	f/t	Capital Add	Amount	f/t	Capital Add	Amount	f/t	Capital Add	Amount	f/t	Capital Add	Amount
Legislative	0	0	160,760	0	0	160,760	0	0	160,760	0	0	160,760
Administration	17	0	3,061,302	17	0	3,087,653	17	0	3,114,458	17	0	3,141,727
Municipal Court	5	0	657,140	5	0	667,633	5	0	678,323	5	0	689,214
Health	9	0	925,199	9	0	938,804	9	0	952,658	9	0	966,767
Senior Services	2	0	200,671	2	0	203,100	2	0	205,572	2	0	208,089
Recreation	22	0	4,130,960	22	0	4,185,332	22	0	4,240,713	22	0	4,297,123
Public Works	46	0	3,908,143	46	0	3,969,364	46	0	4,031,701	46	0	4,095,176
Police	112	0	11,173,637	112	0	11,348,808	112	0	11,527,187	112	0	11,708,833
Media	2	0	215,891	2	0	219,004	2	0	222,175	2	0	225,403
Information Tech.	2	0	383,112	2	0	385,703	2	0	388,337	2	0	391,015
Housing Center	1	0	61,327	1	0	62,372	1	0	63,436	1	0	64,520
Total	218	0	24,878,142	218	0	25,228,533	218	0	25,585,321	218	0	25,948,628

CAPITAL IMPROVEMENT FUND

	2018			2019			2020			2021		
	f/t	Capital Add	Amount	f/t	Capital Add	Amount	f/t	Capital Add	Amount	f/t	Capital Add	Amount
Income			3,250,000			3,250,000			3,250,000			3,250,000
Cap Imp. Exp.	0	450,000	4,841,842	0	450,000	4,846,684	0	450,000	4,846,684	0	450,000	4,846,684

PARK IMPROVEMENT FUND

	2018			2019			2020			2021		
	f/t	Capital Add	Amount	f/t	Capital Add	Amount	f/t	Capital Add	Amount	f/t	Capital Add	Amount
Income			3,400,000			3,400,000			3,400,000			3,400,000
Park Imp. Exp.	17	400,000	4,064,049	17	400,000	4,091,409	17	400,000	4,119,228	17	400,000	4,147,513

STREET FUND

	2018			2019			2020			2021		
	f/t	Capital Add	Amount	f/t	Capital Add	Amount	f/t	Capital Add	Amount	f/t	Capital Add	Amount
Income			500,000			500,000			500,000			500,000
Sewer Lateral Exp.	0	0	679,453	0	0	686,248	0	0	693,110	0	0	700,041

SEWER LATERAL FUND

	2018			2019			2020			2021		
	f/t	Capital Add	Amount	f/t	Capital Add	Amount	f/t	Capital Add	Amount	f/t	Capital Add	Amount
Income			500,000			500,000			500,000			500,000
Sewer Lateral Exp.	0	0	679,453	0	0	686,248	0	0	693,110	0	0	700,041

INTRODUCED BY COUNCIL AS A WHOLE
SUBSTITUTE BILL NO. 9240 **ORDINANCE NO.**

AN ORDINANCE AUTHORIZING AND DIRECTING THE ISSUANCE, SALE AND DELIVERY OF SPECIAL OBLIGATION BONDS, SERIES 2016, OF THE CITY OF FLORISSANT, MISSOURI; AND APPROVING CERTAIN DOCUMENTS AND AUTHORIZING CERTAIN OTHER ACTIONS IN CONNECTION THEREWITH.

WHEREAS, the City of Florissant, Missouri (the "City"), is a municipal corporation and constitutional charter city operating under a home rule form of government, organized and existing under the constitution and laws of the State of Missouri; and

WHEREAS, the City desires to and is authorized under the provisions of the Constitution of the State of Missouri and its Charter to issue and sell Special Obligation Bonds, Series 2016 in an aggregate principal amount not to exceed $8,750,000 (the "Bonds") for the purpose of providing funds to (1) pay the costs of (a) making energy efficiency improvements to the civic center and (b) renovating and improving the municipal court building (collectively, the "Project"), and (2) pay the costs of issuing the Bonds; and

WHEREAS, the principal of and interest on the Bonds will be payable solely from the revenues derived from annual appropriations by the City Council; and

WHEREAS, it is hereby found and determined that it is necessary and advisable and in the best interest of the City and of its inhabitants that the Bonds be issued and secured in the form and manner as hereinafter provided to provide funds for such purposes;

NOW, THEREFORE, BE IT ORDAINED BY THE COUNCIL OF THE CITY OF FLORISSANT, MISSOURI, AS FOLLOWS:

ARTICLE I
DEFINITIONS

Section 101. Definitions of Words and Terms. In addition to words and terms defined elsewhere herein, the following words and terms as used in this Ordinance shall have the following meanings:

"Beneficial Owner" means whenever used with respect to a Bond, the person in whose name such Bond is recorded as the beneficial owner of such Bond by a Participant on the records of such Participant, or such person's subrogee.

"Bond Counsel" means Gilmore & Bell, P.C., St. Louis, Missouri, or other attorneys or firm of attorneys with a nationally recognized standing in the field of municipal bond financing selected by the City.

"Bond Payment Date" means any date on which principal or Redemption Price of or interest on any Bond is payable.

"Bond Register" means the books for the registration, transfer and exchange of Bonds kept at the office of the Paying Agent.

"Bondowner" or **"Registered Owner"** when used with respect to any Bond means the Person in whose name such Bond is registered on the Bond Register.

"Bonds" means the Special Obligation Bonds, Series 2016, authorized and issued by the City pursuant to this Ordinance.

"Business Day" means a day, other than a Saturday, Sunday or holiday, on which the Paying Agent is scheduled in the normal course of its operations to be open to the public for conduct of its banking operations.

"Cede & Co." means Cede & Co., the nominee of DTC, and any successor nominee of DTC with respect to the Bonds.

"City" means the City of Florissant, Missouri, and any successors or assigns.

"Code" means the Internal Revenue Code of 1986, as amended, and the applicable regulations of the Treasury Department proposed or promulgated thereunder.

"Continuing Disclosure Undertaking" means the Continuing Disclosure Undertaking dated as of December 1, 2016.

"Debt Service Fund" means the fund by that name referred to in **Section 501** hereof.

"Defaulted Interest" means interest on any Bond which is payable but not paid on any Interest Payment Date.

"Defeasance Obligations" means any of the following obligations:

(a) cash (insured at all times by the Federal Deposit Insurance Corporation (or otherwise collateralized with obligations described in paragraph (b) or (c) below); or

(b) United States Government Obligations that are not subject to redemption in advance of their maturity dates; or

(c) obligations of any state or political subdivision of any state, the interest on which is excluded from gross income for federal income tax purposes and which meet the following conditions:

(1) the obligations are (A) not subject to redemption prior to maturity or (B) the trustee for such obligations has been given irrevocable instructions concerning their calling and redemption and the issuer of such obligations has covenanted not to redeem such obligations other than as set forth in such instructions;

(2) the obligations are secured by cash or United States Government Obligations that may be applied only to principal of, premium, if any, and interest payments on such obligations;

(3) such cash and the principal of and interest on such United States Government Obligations serving as security for the obligations (plus any cash in the escrow fund) are sufficient to meet the liabilities of the obligations;

(4) such cash and United States Government Obligations serving as security for the obligations are held in an escrow fund by an escrow agent or a trustee irrevocably in trust;

(5) such cash and United States Government Obligations serving as security for the obligations are not available to satisfy any other claims, including those against the trustee or escrow agent; and

(6) the obligations are rated in the same rating category as United States Government Obligations or higher by a nationally recognized rating service.

"DTC" means The Depository Trust Company of New York, New York.

"FAST Agent" means the Paying Agent when acting as agent for DTC in accordance with rules established by DTC for Fast Automated Securities Transfers.

"Federal Tax Certificate" means the Federal Tax Certificate dated December 13, 2016 relating to the Bonds, executed by the City, as the same may be amended or supplemented in accordance with the provisions thereof.

"Fiscal Year" means the fiscal year of the City, currently the period beginning December 1 and ending November 30.

"Final Terms Certificate" means the Final Terms Certificate, in substantially the form attached hereto as **Exhibit E**, executed and delivered by the Mayor pursuant to **Section 210** hereof and attached to this Ordinance as of the date of issuance of the Bonds.

"Interest Payment Date" means the Stated Maturity of an installment of interest on any Bond.

"Maturity" when used with respect to any Bond means the date on which the principal of such Bond becomes due and payable as therein and herein provided, whether at the Stated Maturity thereof or call for redemption or otherwise.

"Ordinance" means this Ordinance authorizing the issuance of the Bonds, as amended from time to time.

"Outstanding" means, when used with reference to Bonds, as of any particular date of determination, all Bonds theretofore authenticated and delivered hereunder, except the following Bonds:

(a) Bonds theretofore canceled by the Paying Agent or delivered to the Paying Agent for cancellation;

(b) Bonds deemed to be paid in accordance with the provisions of **Section 701** hereof; and

(c) Bonds in exchange for or in lieu of which other Bonds have been authenticated and delivered hereunder.

"Participant" means any broker-dealer, bank or other financial institution for which DTC holds Bonds as securities depository.

"Paying Agent" means BOKF, NA, St. Louis, Missouri, and any successors or assigns.

"Permitted Investments" means any securities or investments that are lawful for the investment of the City's moneys held in such funds or accounts under the laws of the State of Missouri.

"Person" means any natural person, corporation, partnership, limited liability company, joint venture, association, firm, joint-stock company, trust, unincorporated organization, or government or any agency or political subdivision thereof or other public body.

"Preliminary Official Statement" means the Preliminary Official Statement, in substantially the form attached hereto as **Exhibit B**.

"Project" means (a) making energy efficiency improvements to the civic center and (b) renovating and improving the municipal court building.

"Project Fund" means the fund by that name referred to in **Section 501** hereof.

"Purchaser" means the original purchaser of the Bonds, identified in the Final Terms Certificate.

"Rebate Fund" means the fund by that name referred to in **Section 501** hereof.

"Record Date" for the interest payable on any Interest Payment Date means the 15th day (whether or not a Business Day) of the calendar month next preceding such Interest Payment Date.

"Redemption Date" when used with respect to any Bond to be redeemed means the date fixed for such redemption pursuant to the terms of this Ordinance.

"Redemption Price" when used with respect to any Bond to be redeemed means the price at which such Bond is to be redeemed pursuant to the terms of this Ordinance, including the applicable redemption premium, if any, but excluding installments of interest whose Stated Maturity is on or before the Redemption Date, which price is to be stated as a percentage of the principal amount of those Bonds to be redeemed.

"Representation Letter" means the Representation Letter from the City and the Paying Agent to DTC with respect to the Bonds.

"Special Record Date" means the date fixed by the Paying Agent pursuant to **Section 204** hereof for the payment of Defaulted Interest.

"Stated Maturity" when used with respect to any Bond or any installment of interest thereon means the date specified in such Bond and this Ordinance as the fixed date on which the principal of such Bond or such installment of interest is due and payable.

"United States Government Obligations" means bonds, notes, certificates of indebtedness, treasury bills or other securities constituting direct obligations of, or obligations the principal of and interest on which are fully and unconditionally guaranteed as to full and timely payment by, the United States of America, including evidences of a direct ownership interest in future interest or principal payments on obligations issued or guaranteed by the United States of America (including the interest component of obligations of the Resolution Funding Corporation), or securities which represent an undivided interest in such obligations, which obligations are rated in the same rating category as the

United States of America or higher by a nationally recognized rating service and such obligations are held in a custodial account for the benefit of the City.

ARTICLE II

AUTHORIZATION OF BONDS

Section 201. Authorization of Bonds. There shall be issued and hereby are authorized and directed to be issued the Special Obligation Bonds, Series 2016, of the City in an original principal amount not to exceed $8,750,000, as set forth in the Final Terms Certificate, subject to the limitations set forth in **Exhibit D** attached hereto, which are being issued for the purpose of providing funds to (a) pay the costs of the Project and (b) pay the costs of issuing the Bonds.

Section 202. Description of Bonds. The Bonds shall consist of fully-registered bonds, numbered from R–1 upward in order of issuance, in denominations of $5,000 or any integral multiple thereof. The Bonds shall be substantially in the form set forth in **Exhibit A** attached hereto, and shall be subject to registration, transfer and exchange as provided in **Section 205** hereof. All of the Bonds shall be dated the date of original issuance and delivery thereof, and shall become due in the amounts on the Stated Maturities, subject to redemption and payment prior to their Stated Maturities as provided in **Article III** hereof, set forth in the Final Terms Certificate.

The Bonds shall bear interest at the rates per annum (computed on the basis of a 360-day year of twelve 30-day months) set forth in the Final Terms Certificate from the date thereof or from the most recent Interest Payment Date to which interest has been paid or duly provided for, payable semiannually on May 1 and November 1 in each year, beginning on May 1, 2017.

Section 203. Designation of Paying Agent.

(a) BOKF, NA, St. Louis, Missouri (the "Paying Agent") is hereby designated as the City's paying agent for the payment of principal of and interest on the Bonds and bond registrar with respect to the registration, transfer and exchange of Bonds.

(b) The City will at all times maintain a Paying Agent meeting the qualifications herein described for the performance of the duties hereunder. The City reserves the right to appoint a successor Paying Agent by (i) filing with the Paying Agent then performing such function a certified copy of the proceedings giving notice of the termination of such Paying Agent and appointing a successor, and (ii) causing notice of the appointment of the successor Paying Agent to be given by first class mail to each Bondowner. The Paying Agent may resign by giving written notice by first class mail to the City and the Bondowners not less than 60 days prior to the date such resignation is to take effect. No resignation or removal of the Paying Agent shall become effective until a successor has been appointed and has accepted the duties of Paying Agent.

(c) Every Paying Agent appointed hereunder shall at all times be a commercial banking association or corporation or trust company located in the State of Missouri organized and doing business under the laws of the United States of America or of the State of Missouri, authorized under such laws to exercise trust powers and subject to supervision or examination by federal or state regulatory authority.

(d) The Paying Agent shall be paid its fees and expenses for its services in connection with the Bonds.

Section 204. Method and Place of Payment of Bonds.

(a) The principal or Redemption Price of and interest on the Bonds shall be payable in any coin or currency of the United States of America that, on the respective dates of payment thereof, is legal tender for the payment of public and private debts.

(b) The principal or Redemption Price of each Bond shall be paid at Maturity by check, electronic transfer or draft to the Person in whose name such Bond is registered on the Bond Register at the Maturity thereof, upon presentation and surrender of such Bond at such payment office designated by the Paying Agent.

(c) The interest payable on each Bond on any Interest Payment Date shall be paid to the Registered Owner of such Bond as shown on the Bond Register at the close of business on the Record Date for such interest (i) by check or draft mailed by the Paying Agent to the address of such Registered Owner shown on the Bond Register or (ii) by electronic transfer to such Registered Owner upon written notice signed by such Registered Owner and given to the Paying Agent not less than 15 days prior to the Record Date for such interest, containing the electronic transfer instructions including the bank, ABA routing number and account number to which such Registered Owner wishes to have such transfer directed and an acknowledgment that an electronic transfer fee may be applicable.

(d) Notwithstanding the foregoing provisions of this Section, any Defaulted Interest with respect to any Bond shall cease to be payable to the Registered Owner of such Bond on the relevant Record Date and shall be payable to the Registered Owner in whose name such Bond is registered at the close of business on the Special Record Date for the payment of such Defaulted Interest, which Special Record Date shall be fixed as hereinafter specified in this paragraph. The City shall notify the Paying Agent in writing of the amount of Defaulted Interest proposed to be paid on each Bond and the date of the proposed payment (which date shall be at least 30 days after receipt of such notice by the Paying Agent unless the City and the Paying Agent agree to a shorter time period) and shall deposit with the Paying Agent at the time of such notice an amount of money equal to the aggregate amount proposed to be paid in respect of such Defaulted Interest or shall make arrangements satisfactory to the Paying Agent for such deposit prior to the date of the proposed payment. Following receipt of such funds the Paying Agent shall fix a Special Record Date for the payment of such Defaulted Interest which shall be not more than 15 nor less than 10 days prior to the date of the proposed payment, unless the City and the Paying Agent agree to a shorter time period. The Paying Agent shall promptly notify the City of such Special Record Date and, in the name and at the expense of the City, shall cause notice of the proposed payment of such Defaulted Interest and the Special Record Date therefor to be mailed, by first class mail, postage prepaid, to each Registered Owner of a Bond entitled to such notice at the address of such Registered Owner as it appears on the Bond Register on such Special Record Date.

(e) The Paying Agent shall keep a record of the payment of principal and Redemption Price of and interest on all Bonds and, upon the City's written request, at least annually forward a copy or summary of such records to the City.

Section 205. Registration, Transfer and Exchange of Bonds.

(a) The City covenants that, as long as any of the Bonds remain Outstanding, it will cause the Bond Register to be kept at the office of the Paying Agent or such other office designated by the Paying Agent for the registration, transfer and exchange of Bonds as herein provided. Each Bond when issued shall be registered in the name of the owner thereof on the Bond Register.

(b) Bonds may be transferred and exchanged only on the Bond Register as provided in this Section. Upon surrender of any Bond at the principal payment office of the Paying Agent, or such other office designated by the Paying Agent, the Paying Agent shall transfer or exchange such Bond for a new Bond or Bonds in any authorized denomination of the same Stated Maturity and in the same aggregate principal amount as the Bond that was presented for transfer or exchange. Bonds presented for transfer or exchange shall be accompanied by a written instrument or instruments of transfer or authorization for exchange, in a form and with guarantee of signature satisfactory to the Paying Agent, duly executed by the Registered Owner thereof or by the Registered Owner's duly authorized agent.

(c) In all cases in which the privilege of transferring or exchanging Bonds is exercised, the Paying Agent shall authenticate and deliver Bonds in accordance with the provisions of this Ordinance. The City shall pay the fees and expenses of the Paying Agent for the registration, transfer and exchange of Bonds provided for by this Ordinance and the cost of printing a reasonable supply of registered bond blanks. Any additional costs or fees that might be incurred in the secondary market, other than fees of the Paying Agent, are the responsibility of the Registered Owners of the Bonds. If any Registered Owner fails to provide a correct taxpayer identification number to the Paying Agent, the Paying Agent may make a charge against such Registered Owner sufficient to pay any governmental charge required to be paid as a result of such failure. In compliance with Section 3406 of the Code, such amount may be deducted by the Paying Agent from amounts otherwise payable to such Registered Owner hereunder or under the Bonds.

(d) The City and the Paying Agent shall not be required to (i) register the transfer or exchange of any Bond that has been called for redemption after notice of such redemption has been mailed by the Paying Agent pursuant to **Section 303** hereof and during the period of 15 days next preceding the date of mailing of such notice of redemption, or (ii) register the transfer or exchange of any Bond during a period beginning at the opening of business on the day after receiving written notice from the City of its intent to pay Defaulted Interest and ending at the close of business on the date fixed for the payment of Defaulted Interest pursuant to **Section 204** hereof.

(e) The City and the Paying Agent may deem and treat the Person in whose name any Bond is registered on the Bond Register as the absolute owner of such Bond, whether such Bond is overdue or not, for the purpose of receiving payment of, or on account of, the principal or Redemption Price of and interest on said Bond and for all other purposes. All payments so made to any such Registered Owner or upon the Registered Owner's order shall be valid and effective to satisfy and discharge the liability upon such Bond to the extent of the sum or sums so paid, and neither the City nor the Paying Agent shall be affected by any notice to the contrary.

(f) At reasonable times and under reasonable regulations established by the Paying Agent, the Bond Register may be inspected and copied by the Registered Owners of 10% or more in principal amount of the Bonds then Outstanding or any designated representative of such Registered Owners whose authority is evidenced to the satisfaction of the Paying Agent.

Section 206. Execution, Registration, Authentication and Delivery of Bonds.

(a) Each of the Bonds, including any Bonds issued in exchange or as substitutions for the Bonds initially delivered, shall be signed by the manual or facsimile signature of the Mayor and attested by the manual or facsimile signature of the City Clerk and shall have the official seal of the City affixed or imprinted thereon. In case any officer whose signature appears on any Bond ceases to be such officer before the delivery of such Bond, such signature shall nevertheless be valid and sufficient for all purposes, as if such person had remained in office until delivery. Any Bond may be signed by such

persons who at the actual time of the execution of such Bond are the proper officers to sign such Bond although at the date of such Bond such persons may not have been such officers.

(b) The Mayor and City Clerk are hereby authorized and directed to prepare and execute the Bonds in the manner herein specified, and, when duly executed and registered, to deliver the Bonds to the Paying Agent for authentication.

(c) The Bonds shall have endorsed thereon a certificate of authentication substantially in the form set forth in **Exhibit A** attached hereto, which shall be manually executed by an authorized signatory of the Paying Agent, but it shall not be necessary that the same signatory sign the certificate of authentication on all of the Bonds that may be issued hereunder at any one time. No Bond shall be entitled to any security or benefit under this Ordinance or be valid or obligatory for any purpose unless and until such certificate of authentication has been duly executed by the Paying Agent. Such executed certificate of authentication upon any Bond shall be conclusive evidence that such Bond has been duly authenticated and delivered under this Ordinance. Upon authentication, the Paying Agent shall deliver the Bonds to or upon the order of the Purchaser, or shall hold the Bonds as FAST Agent for the benefit of the Beneficial Owners (as hereinafter defined), upon payment to the City of the purchase price of the Bonds plus accrued interest thereon, if any, to the date of their delivery.

Section 207. Mutilated, Destroyed, Lost and Stolen Bonds.

(a) If (i) any mutilated Bond is surrendered to the Paying Agent or the Paying Agent receives evidence to its satisfaction of the destruction, loss or theft of any Bond, and (ii) there is delivered to the Paying Agent such security or indemnity as may be required by the Paying Agent to save each of the City and the Paying Agent harmless, then, in the absence of notice to the Paying Agent that such Bond has been acquired by a bona fide purchaser, the City shall execute and the Paying Agent shall authenticate and deliver, in exchange for or in lieu of any such mutilated, destroyed, lost or stolen Bond, a new Bond of the same Stated Maturity and of like tenor and principal amount.

(b) If any such mutilated, destroyed, lost or stolen Bond has become or is about to become due and payable, the Paying Agent, in its discretion, may pay such Bond instead of delivering a new Bond.

(c) Upon the issuance of any new Bond under this Section, the City or the Paying Agent may require the payment by the Registered Owner of a sum sufficient to cover any tax or other governmental charge that may be imposed in relation thereto and any other expenses (including the fees and expenses of the Paying Agent) connected therewith.

(d) Every new Bond issued pursuant to this Section shall constitute a replacement of the City's prior obligation, and shall be entitled to all the benefits of this Ordinance equally and ratably with all other Outstanding Bonds.

Section 208. Cancellation and Destruction of Bonds Upon Payment. All Bonds that have been paid or redeemed or that otherwise have been surrendered to the Paying Agent, either at or before Maturity, shall be canceled by the Paying Agent immediately upon the payment, redemption and surrender thereof to the Paying Agent and subsequently destroyed in accordance with the customary practices of the Paying Agent. The Paying Agent shall execute a certificate in duplicate describing the Bonds so canceled and shall file an executed counterpart of such certificate with the City.

Section 209. Preliminary and Final Official Statement.

(a) The Preliminary Official Statement, in substantially the form attached hereto as **Exhibit B**, is hereby ratified and approved, and the final Official Statement is hereby authorized and approved by supplementing, amending and completing the Preliminary Official Statement, with such changes and additions thereto as are necessary to conform to and describe the transaction. The Mayor is hereby authorized to execute the final Official Statement as so supplemented, amended and completed, and the use and public distribution of the final Official Statement by the Purchaser in connection with the reoffering of the Bonds is hereby authorized. The proper officials of the City are hereby authorized to execute and deliver a certificate pertaining to such Official Statement as prescribed therein, dated as of the date of payment for and delivery of the Bonds.

(b) The City agrees to provide to the Purchaser within seven business days of the date of the sale of Bonds sufficient copies of the final Official Statement to enable the Purchaser to comply with the requirements of Rule 15c2-12(b)(4) of the Securities and Exchange Commission (the "SEC") and with the requirements of Rule G-32 of the Municipal Securities Rulemaking Board (the "MSRB").

Section 210. Sale of Bonds.

(a) The City agrees to sell the Bonds to the Purchaser at the purchase price set forth in the Final Terms Certificate, upon the terms and conditions set forth therein and with such changes therein as shall be approved by the Mayor and Director of Finance.

(b) The Mayor or Director of Finance are hereby authorized to, without any further authorization or direction from the City Council, (1) approve the purchase price for the Bonds, the principal amounts by maturity, the interest rates, the optional redemption provisions, and the other final terms of the Bonds, subject to the limitations set forth in **Exhibit D** attached hereto, (2) execute the Final Terms Certificate in substantially the form attached to this Ordinance as **Exhibit E**, and (3) award the sale of the Bonds or reject all bids, for and on behalf of and as the act and deed of the City, which approval will be conclusively evidenced by the execution by the Mayor of the Final Terms Certificate, provided that the final terms of the Bonds set forth therein shall meet all of the requirements of this Ordinance and the Notice of Bond Sale. Upon execution, the Final Terms Certificate will be attached and made part of this Ordinance. The City Clerk is authorized and directed to attest the execution of the Final Terms Certificate and any other documents, certificates and instruments that are necessary or desirable to carry out the intent of this Ordinance.

Section 211. Securities Depository.

(a) The Bonds shall be initially issued as one single authenticated fully registered bond for each Stated Maturity. Upon initial issuance, the ownership of such Bonds shall be registered in the Bond Register of the City kept by the Paying Agent in the name of Cede & Co., as nominee of DTC. The Paying Agent and the City may treat DTC (or its nominee) as the sole and exclusive owner of the Bonds registered in its name for the purposes of payment of the principal or Redemption Price of or interest on the Bonds, selecting the Bonds or portions thereof to be redeemed, giving any notice permitted or required to be given to Registered Owners of Bonds under this Ordinance, registering the transfer of Bonds, and for all other purposes whatsoever; and neither the Paying Agent nor the City shall be affected by any notice to the contrary. Neither the Paying Agent nor the City shall have any responsibility or obligation to any Participant, any person claiming a beneficial ownership interest in the Bonds under or through DTC or any Participant, or any other person which is not shown on the Bond Register kept by the Paying Agent as being a Registered Owner of any Bonds, with respect to the accuracy of any records maintained by DTC or any Participant, with respect to the payment by DTC or any Participant of any

amount with respect to the principal or Redemption Price of or interest on the Bonds, with respect to any notice which is permitted or required to be given to Owners of Bonds under this Ordinance, with respect to the selection by DTC or any Participant of any Person to receive payment in the event of a partial redemption of the Bonds, or with respect to any consent given or other action taken by DTC as Registered Owner of the Bonds. The Paying Agent shall pay all principal of and interest on the Bonds only to Cede & Co. in accordance with the Representation Letter, and all such payments shall be valid and effective to fully satisfy and discharge the City's obligations with respect to the principal or Redemption Price of and interest on the Bonds to the extent of the sum or sums so paid. No person other than DTC (or the Paying Agent as Fast Agent) shall receive an authenticated Bond for each separate stated maturity evidencing the obligation of the City to make payments of principal or Redemption Price of and interest. Upon delivery by DTC to the Paying Agent of written notice to the effect that DTC has determined to substitute a new nominee in place of Cede & Co., the Bonds will be transferable to such new nominee in accordance with paragraph (d) hereof.

(b) If Participants holding a majority position in the Bonds determine that it is in the best interest of the Beneficial Owners that they be able to obtain certificated bonds, the Participants may notify DTC and the Paying Agent, whereupon DTC shall notify the Participants of the availability through DTC of bonds. In such event, the Bonds will be transferable in accordance with paragraph (d) hereof. DTC may determine to discontinue providing its services with respect to the Bonds at any time by giving notice to the City and the Paying Agent and discharging its responsibilities with respect thereto under applicable law. In such event the Bonds will be transferable in accordance with paragraph (d) hereof.

(c) Notwithstanding any other provision of this Ordinance to the contrary, so long as any Bond is registered in the name of Cede & Co., as nominee of DTC, all payments with respect to the principal or Redemption Price of and interest on such Bond and all notices with respect to such Bond shall be made and given, respectively, to DTC as provided in the Representation Letter.

(d) If any transfer or exchange of Bonds is permitted under paragraph (a) or (b) hereof, such transfer or exchange shall be accomplished upon receipt by the Paying Agent from the Registered Owners thereof of the Bonds to be transferred or exchanged and appropriate instruments of transfer to the permitted transferee in accordance with the provisions of this Ordinance. If Bonds are issued to holders other than Cede & Co., its successor as nominee for DTC as holder of all the Bonds, or other securities depository as holder of all the Bonds, the provisions of this Ordinance shall also apply to all matters relating thereto, including, without limitation, the printing of such Bonds and the method of payment of the principal of and interest on such Bonds. In the event that Bonds are issued to holders other than DTC, the Paying Agent may rely on information provided by DTC or any Participant as to the names, addresses of and principal amounts held by the beneficial owners of the Bonds.

ARTICLE III

REDEMPTION OF BONDS

Section 301. Redemption of Bonds.

(a) *Optional Redemption.* At the option of the City, the Bonds or portions thereof maturing on November 1, 2025 and thereafter may be called for redemption and payment prior to their Stated Maturity on November 1, 2024 and thereafter as a whole or in part at any time at the Redemption Price of 100% of the principal amount thereof, plus accrued interest thereon to the Redemption Date.

(b) *Mandatory Redemption.* Any Bonds subject to mandatory redemption and payment prior to their stated maturity (the "Term Bonds") designated in the Final Terms Certificate shall be subject to the following mandatory redemption requirements. At its option, to be exercised on or before the 45th day next preceding any mandatory Redemption Date, the City may: (1) deliver to the Paying Agent for cancellation Term Bonds subject to mandatory redemption on said mandatory Redemption Date, in any aggregate principal amount desired, (2) furnish the Paying Agent funds, together with appropriate instructions, for the purpose of purchasing any Term Bonds subject to mandatory redemption on said mandatory Redemption Date from any Registered Owner thereof whereupon the Paying Agent shall expend such funds for such purpose to such extent as may be practical, or (3) receive a credit with respect to the mandatory redemption obligation of the City under this Section for any Term Bonds subject to mandatory redemption on said mandatory Redemption Date which, prior to such date, have been redeemed (other than through the operation of the mandatory redemption requirements of this subsection (b)) and cancelled by the Paying Agent and not theretofore applied as a credit against any redemption obligation under this subsection (b). Each Term Bond so delivered or previously purchased or redeemed shall be credited at 100% of the principal amount thereof on the obligation of the City to redeem Term Bonds of the same Stated Maturity on such mandatory Redemption Date, and any excess of such amount shall be credited on future mandatory redemption obligations for Term Bonds of the same Stated Maturity in chronological order, and the principal amount of Term Bonds of the same Stated Maturity to be redeemed by operation of the requirements of this Section shall be accordingly reduced. If the City intends to exercise any option granted by the provisions of clauses (1), (2) or (3) above, the City will, on or before the 45th day next preceding each mandatory Redemption Date, furnish the Paying Agent a written certificate indicating to what extent the provisions of said clauses (1), (2) and (3) are to be complied with respect to such mandatory redemption payment.

Section 302. Selection of Bonds to be Redeemed.

(a) The Paying Agent shall call Bonds for redemption and payment and shall give notice of such redemption as herein provided upon receipt by the Paying Agent at least 45 days prior to the Redemption Date of the City's written instructions specifying the principal amount, Stated Maturities, Redemption Date and Redemption Prices of the Bonds to be called for redemption. If the Bonds are refunded more than 90 days in advance of the Redemption Date, any escrow agreement entered into by the City in connection with the refunding shall provide that the written instructions to the Paying Agent shall be given by the escrow agent on the City's behalf not less than 45 days prior to the Redemption Date. The Paying Agent may in its discretion waive such notice period so long as the notice requirements set forth in **Section 303** hereof are met. The foregoing provisions of this paragraph shall not apply to the mandatory redemption of Bonds hereunder, and Term Bonds shall be called by the Paying Agent for redemption pursuant to such mandatory redemption requirements without the necessity of any action by the City and whether or not the Paying Agent shall hold in the Debt Service Fund moneys available and sufficient to effect the required redemption.

(b) Bonds shall be redeemed only in the principal amount of $5,000 or any integral multiple thereof. When less than all of the Outstanding Bonds are to be redeemed, such Bonds shall be redeemed in such order of their Stated Maturities as shall be determined by the City, and Bonds of less than a full Stated Maturity shall be selected by the Paying Agent in $5,000 units of principal amount in such equitable manner as the Paying Agent may determine in its discretion.

(c) In the case of a partial redemption of Bonds when Bonds of denominations greater than $5,000 are then Outstanding, then for all purposes in connection with such redemption each $5,000 of face value shall be treated as though it were a separate Bond of the denomination of $5,000. If it is determined that one or more, but not all, of the $5,000 units of face value represented by any Bond are selected for redemption, then upon notice of intention to redeem such $5,000 unit or units, the Registered

Owner of such Bond or the Registered Owner's duly authorized agent shall present and surrender such Bond to the Paying Agent (i) for payment of the Redemption Price and interest to the Redemption Date of such $5,000 unit or units of face value called for redemption, and (ii) for exchange, without charge to the Registered Owner thereof, for a new Bond or Bonds of the aggregate principal amount of the unredeemed portion of the principal amount of such Bond. If the Registered Owner of any such Bond fails to present such Bond to the Paying Agent for payment and exchange as aforesaid, such Bond shall, nevertheless, become due and payable on the Redemption Date to the extent of the $5,000 unit or units of face value called for redemption (and to that extent only).

Section 303. Notice and Effect of Call for Redemption.

(a) Unless waived by any Registered Owner of Bonds to be redeemed, official notice of any redemption shall be given by the Paying Agent on the City's behalf by mailing a copy of an official redemption notice by first class mail at least 30 days but not more than 60 days prior to the Redemption Date to the Purchaser of the Bonds and each Registered Owner of the Bond or Bonds to be redeemed at the address shown on the Bond Register.

(b) All official notices of redemption shall be dated and shall contain the following information:

(i) the Redemption Date;

(ii) the Redemption Price;

(iii) if less than all Outstanding Bonds are to be redeemed, the identification number, Stated Maturity and, in the case of partial redemption of any Bonds, the respective principal amounts of the Bonds to be redeemed;

(iv) a statement that on the Redemption Date the Redemption Price will become due and payable upon each such Bond or portion thereof called for redemption and that interest thereon shall cease to accrue from and after the Redemption Date; and

(v) the place where such Bonds are to be surrendered for payment of the Redemption Price.

(c) Prior to any Redemption Date, the City shall deposit with the Paying Agent an amount of money sufficient to pay the Redemption Price of all the Bonds or portions of Bonds that are to be redeemed on such Redemption Date.

(d) With respect to optional redemptions, such notice may be conditioned upon moneys being on deposit with the Paying Agent on or prior to the Redemption Date in an amount sufficient to pay the Redemption Price on the Redemption Date. If such notice is conditional and either the Paying Agent receives written notice from the City that moneys sufficient to pay the Redemption Price will not be on deposit on the Redemption Date, or such moneys are not received on the Redemption Date, then such notice shall be of no force and effect, the Paying Agent shall not redeem such Bonds and the Paying Agent shall give notice, in the same manner in which the notice of redemption was given, that such moneys were not or will not be so received and that such Bonds will not be redeemed.

(e) Official notice of redemption having been given as aforesaid, the Bonds or portions of Bonds to be redeemed shall become due and payable on the Redemption Date, at the Redemption Price therein specified, and from and after the Redemption Date (unless the City defaults in the payment of the

Redemption Price) such Bonds or portion of Bonds shall cease to bear interest. Upon surrender of such Bonds for redemption in accordance with such notice, the Redemption Price of such Bonds shall be paid by the Paying Agent. Installments of interest due on or prior to the Redemption Date shall be payable as herein provided for payment of interest. Upon surrender for any partial redemption of any Bond, the Paying Agent shall prepare for the Registered Owner a new Bond or Bonds of the same Stated Maturity in the amount of the unpaid principal as provided herein. All Bonds that have been surrendered for redemption shall be canceled and destroyed by the Paying Agent as provided herein and shall not be reissued.

(f) The failure of any Registered Owner to receive the foregoing notice or any defect therein shall not invalidate the effectiveness of the call for redemption of any other Bond.

(g) In addition to the foregoing notice, further notice shall be given by the Paying Agent on the City's behalf as set out below, but no defect in said further notice nor any failure to give all or any portion of such further notice shall in any manner defeat the effectiveness of a call for redemption if official notice thereof is given as above prescribed.

(i) Each further notice of redemption given hereunder shall contain the information required above for an official notice of redemption plus (A) the CUSIP numbers of all Bonds being redeemed; (B) the date of issue of the Bonds as originally issued; and (C) any other descriptive information needed to identify accurately the Bonds being redeemed.

(ii) Each further notice of redemption shall be filed on the Electronic Municipal Market Access system for municipal securities disclosures ("EMMA") established and maintained by the MSRB (or any successor to EMMA established by the MSRB), at least one day before the mailing of notice to Registered Owners. If EMMA ceases to exist, then each further notice of redemption shall be sent by first class, registered or certified mail or overnight delivery, as determined by the Paying Agent, to one or more national information services that disseminate notices of redemption of obligations such as the Bonds.

(h) Each check or other transfer of funds issued for the payment of the Redemption Price of Bonds being redeemed shall bear or have enclosed therewith the CUSIP number of the Bonds being redeemed with the proceeds of such check or other transfer.

(i) The Paying Agent is also directed to comply with any mandatory standards then in effect for processing redemptions of municipal securities established by the SEC. Failure to comply with such standards shall not affect or invalidate the redemption of any Bond.

ARTICLE IV

SECURITY FOR AND PAYMENT OF BONDS

Section 401. Security for the Bonds.

(a) The Bonds are special obligations of the City payable as to both principal or Redemption Price of and interest on the Bonds solely from annual appropriations of funds by the City for such purpose to be deposited in the Debt Service Fund. The obligation of the City to make payments into the Debt Service Fund and any other obligations of the City to make payments under this Ordinance do not constitute a general obligation or indebtedness of the City for which the City is obligated to levy or pledge any form of taxation, or for which the City has levied or pledged any form of taxation and shall

not be construed to be a debt of the City in contravention of any applicable constitutional, statutory or charter limitation or requirement but in each Fiscal Year shall be payable solely from the amounts pledged or appropriated therefor (i) out of the income and revenues provided for such year plus (ii) any unencumbered balances for previous years. Subject to the preceding sentence, the obligations of the City to make payments hereunder and to perform and observe any other covenant and agreement contained herein shall be absolute and unconditional.

(b) The covenants and agreements of the City contained herein and in the Bonds shall be for the equal benefit, protection and security of the legal owners of any or all of the Bonds, all of which Bonds shall be of equal rank and without preference or priority of one Bond over any other Bond in the application of the funds to the payment of the principal or Redemption Price of and the interest on the Bonds, or otherwise, except as to the rate of interest and Stated Maturity as provided in this Ordinance.

Section 402. Covenant to Request Appropriations. The City Council hereby directs the Director of Finance or any other officer of the City at any time charged with the responsibility of formulating budget proposals to (a) include in each annual budget an appropriation of the amount necessary (after taking into account any moneys legally available for such purpose) to pay debt service on the Bonds in the next succeeding Fiscal Year, and (b) take such further action (or cause the same to be taken) as may be necessary or desirable to assure the availability of moneys appropriated to pay such debt service on the Bonds in the next succeeding Fiscal Year. This does not obligate the City Council to appropriate such funds.

ARTICLE V

ESTABLISHMENT OF FUNDS; DEPOSIT AND APPLICATION OF MONEYS

Section 501. Establishment of Funds. There have been or shall be established in the treasury of the City and shall be held and administered by the Director of Finance of the City the following separate funds:

(a) Debt Service Fund.

(b) Project Fund.

(c) Rebate Fund.

Section 502. Deposit of Bond Proceeds. The net proceeds received from the sale of the Bonds shall be deposited simultaneously with the delivery of the Bonds in the Project Fund.

Section 503. Application of Money in the Project Fund.

(a) Money in the Project Fund shall be used by the City solely for the purpose of paying costs of the Project and the costs and expenses of issuing the Bonds.

(b) The Director of Finance shall make withdrawals from the Project Fund only for the purpose of paying costs of the Project that are submitted pursuant to an express contract approved by the City Council or that have been expressly approved for payment by the City Council, or if the City Council has delegated the approval of Project costs to the Mayor, then for such costs of the Project as are set forth in a certificate signed by the Mayor. Nothing hereinbefore contained shall prevent the payment out of the

Project Fund of all costs and expenses incident to the issuance of the Bonds without such a certificate or approval.

(c) Upon completion of the purpose for which the Bonds have been issued, any surplus remaining in the Project Fund shall be transferred to and deposited in the Debt Service Fund.

Section 504. Application of Moneys in Debt Service Fund.

(a) All amounts paid and credited to the Debt Service Fund shall be expended and used by the City for the sole purpose of paying the principal or Redemption Price of and interest on the Bonds as and when the same become due and the usual and customary fees and expenses of the Paying Agent. The Director of Finance is authorized and directed to withdraw from the Debt Service Fund sums sufficient to pay principal or Redemption Price of and interest on the Bonds and the fees and expenses of the Paying Agent as and when the same become due, and to forward such sums to the Paying Agent in a manner which ensures that the Paying Agent will receive immediately available funds in such amounts on or before 11:00 a.m. of the Business Day when such principal or Redemption Price, interest and fees of the Paying Agent will become due. If, through the lapse of time or otherwise, the Registered Owners of Bonds are no longer entitled to enforce payment of the Bonds or the interest thereon, the Paying Agent shall return said funds to the City. All moneys deposited with the Paying Agent shall be deemed to be deposited in accordance with and subject to all of the provisions contained in this Ordinance and shall be held in trust by the Paying Agent for the benefit of the Registered Owners of the Bonds entitled to payment from such moneys.

(b) Any moneys or investments remaining in the Debt Service Fund after the retirement of the Bonds shall be transferred and paid into the general fund of the City.

Section 505. Deposits and Investment of Moneys.

(a) Moneys in each of the funds created by and referred to in this Ordinance shall be deposited in a bank or banks or other legally permitted financial institutions located in the State of Missouri that are members of the Federal Deposit Insurance Corporation. All such deposits shall be continuously and adequately secured by the financial institutions holding such deposits as provided by the laws of the State of Missouri. All moneys held in the funds created by this Ordinance shall be kept separate and apart from all other funds of the City so that there shall be no commingling of such funds with any other funds of the City.

(b) Moneys held in any fund referred to in this Ordinance may be invested by the Director of Finance in accordance with the investment policy of the City, as such policy may be amended from time to time, in accordance with this Ordinance and the Federal Tax Certificate, in Permitted Investments; provided, however, that no such investment shall be made for a period extending longer than to the date when the moneys invested may be needed for the purpose for which such fund was created. All earnings on any investments held in any fund shall accrue to and become a part of such fund.

Section 506. Nonpresentment of Bonds. If any Bond is not presented for payment when the principal thereof becomes due at Maturity, if funds sufficient to pay such Bond have been made available to the Paying Agent all liability of the City to the Registered Owner thereof for the payment of such Bond shall forthwith cease, determine and be completely discharged, and thereupon it shall be the duty of the Paying Agent to hold such funds, without liability for interest thereon, for the benefit of the Registered Owner of such Bond, who shall thereafter be restricted exclusively to such funds for any claim of whatever nature on his part under this Ordinance or on, or with respect to, said Bond. If any Bond is not presented for payment within one year following the date when such Bond becomes due at Maturity, the

Paying Agent shall repay without liability for interest thereon, to the City the funds theretofore held by it for payment of such Bond, and such Bond shall, subject to the defense of any applicable statute of limitation, thereafter be an unsecured obligation of the City, and the Registered Owner thereof shall be entitled to look only to the City for payment, and then only to the extent of the amount so repaid to it by the Paying Agent, and the City shall not be liable for any interest thereon and shall not be regarded as a trustee of such money.

Section 507. Payments Due on Saturdays, Sundays and Holidays. In any case where a Bond Payment Date is not a Business Day, then payment of the principal or Redemption Price of and interest on the Bonds need not be made on such Bond Payment Date but may be made on the next succeeding Business Day with the same force and effect as if made on such Bond Payment Date, and no interest shall accrue for the period after such Bond Payment Date.

Section 508. Application of Money in the Rebate Fund.

(a) There shall be deposited in the Rebate Fund such amounts as are required to be deposited therein pursuant to the Federal Tax Certificate. All money at any time deposited in the Rebate Fund shall be held in trust, to the extent required to pay arbitrage rebate, and neither the City nor the Registered Owner of any Bonds shall have any rights in or claim to such money. All amounts deposited into or on deposit in the Rebate Fund shall be governed by this Section and the Federal Tax Certificate.

(b) The City shall periodically determine the amount of arbitrage rebate due under Section 148(f) of the Code in accordance with the Federal Tax Certificate, and the City shall make payments to the United States of America at the times and in the amounts determined under the Federal Tax Certificate. Any money remaining in the Rebate Fund after redemption and payment of all of the Bonds and payment and satisfaction of any arbitrage rebate, or provision made therefor, shall be released to the City.

(c) Notwithstanding any other provision of this Ordinance, including in particular **Article VII** hereof, the obligation to pay arbitrage rebate and to comply with all other requirements of this Section and the Federal Tax Certificate shall survive the defeasance or payment in full of the Bonds.

ARTICLE VI

REMEDIES

Section 601. Remedies. The provisions of this Ordinance, including the covenants and agreements herein contained, shall constitute a contract between the City and the Registered Owners of the Bonds, and the Registered Owner or Owners of not less than 10% in principal amount of the Bonds at the time Outstanding shall have the right for the equal benefit and protection of all Registered Owners of Bonds similarly situated:

(a) by mandamus or other suit, action or proceedings at law or in equity to enforce the rights of such Registered Owner or Owners against the City and its officers, agents and employees, and to require and compel duties and obligations required by the provisions of this Ordinance or by the constitution and laws of the State of Missouri;

(b) by suit, action or other proceedings in equity or at law to require the City, its officers, agents and employees to account as if they were the trustees of an express trust; and

(c) by suit, action or other proceedings in equity or at law to enjoin any acts or things which may be unlawful or in violation of the rights of the Registered Owners of the Bonds.

Section 602. Limitation on Rights of Bondowners. The covenants and agreements of the City contained herein and in the Bonds shall be for the equal benefit, protection and security of the legal owners of any or all of the Bonds. All of the Bonds shall be of equal rank and without preference or priority of one Bond over any other Bond in the application of the funds herein pledged to the payment of the principal of and the interest on the Bonds, or otherwise, except as to rate of interest, or date of Maturity or right of prior redemption as provided in this Ordinance. No one or more Bondowners secured hereby shall have any right in any manner whatever by his or their action to affect, disturb or prejudice the security granted and provided for herein, or to enforce any right hereunder, except in the manner herein provided, and all proceedings at law or in equity shall be instituted, had and maintained for the equal benefit of all Registered Owners of such Outstanding Bonds.

Section 603. Remedies Cumulative. No remedy conferred herein upon the Bondowners is intended to be exclusive of any other remedy, but each such remedy shall be cumulative and in addition to every other remedy and may be exercised without exhausting and without regard to any other remedy conferred herein. No waiver of any default or breach of duty or contract by the Registered Owner of any Bond shall extend to or affect any subsequent default or breach of duty or contract or shall impair any rights or remedies consequent thereon. No delay or omission of any Bondowner to exercise any right or power accruing upon any default shall impair any such right or power or shall be construed to be a waiver of any such default or acquiescence therein. Every substantive right and every remedy conferred upon the Registered Owners of the Bonds by this Ordinance may be enforced and exercised from time to time and as often as may be deemed expedient. If any suit, action or proceedings taken by any Bondowner on account of any default or to enforce any right or exercise any remedy has been discontinued or abandoned for any reason, or has been determined adversely to such Bondowner, then, and in every such case, the City and the Registered Owners of the Bonds shall be restored to their former positions and rights hereunder, respectively, and all rights, remedies, powers and duties of the Bondowners shall continue as if no such suit, action or other proceedings had been brought or taken.

Section 604. No Acceleration. Notwithstanding anything herein to the contrary, the Bonds are not subject to acceleration upon the occurrence of an event of default hereunder.

Section 605. No Obligation to Levy Taxes. Nothing contained in this Ordinance shall be construed as imposing on the City any duty or obligation to levy any taxes either to meet any obligation incurred hereunder or to pay the principal of or interest on the Bonds.

Section 606. Exception for Continuing Disclosure. This **Article VI** shall not apply to **Section 806** hereof regarding the City's continuing disclosure obligations, and Bondowners or Beneficial Owners (as defined in the Continuing Disclosure Undertaking) of the Bonds shall have no remedies for enforcement of said obligations other than the remedies provided for in **Section 806** hereof and the City's Continuing Disclosure Undertaking.

ARTICLE VII

DEFEASANCE

Section 701. Defeasance. When any or all of the Bonds or scheduled interest payments thereon have been paid and discharged, then the requirements contained in this Ordinance and all other rights granted hereby shall terminate with respect to the Bonds or scheduled interest payments thereon so paid

and discharged. Bonds or scheduled interest payments thereon shall be deemed to have been paid and discharged within the meaning of this Ordinance if there has been deposited with the Paying Agent, or other commercial bank or trust company located in the State of Missouri and having full trust powers, at or prior to the Stated Maturity or Redemption Date of said Bonds or the interest payments thereon, in trust for and irrevocably appropriated thereto, moneys and Defeasance Obligations which, together with the interest to be earned on any such Defeasance Obligations, will be sufficient for the payment of the principal of and redemption premium, if any, on said Bonds and interest accrued to the Stated Maturity or Redemption Date, or if default in such payment has occurred on such date, then to the date of the tender of such payments; provided, however, that if any such Bonds are to be redeemed prior to their Stated Maturity, (i) the City has elected to redeem such Bonds, and (ii) either notice of such redemption has been given, or the City has given irrevocable instructions, or shall have provided for an escrow agent to give irrevocable instructions, to the Paying Agent to give such notice of redemption in compliance with **Section 302(a)** hereof. Any money and Defeasance Obligations that at any time shall be deposited with the Paying Agent or other commercial bank or trust company by or on behalf of the City, for the purpose of paying and discharging any of the Bonds, shall be and are hereby assigned, transferred and set over to the Paying Agent or other bank or trust company in trust for the respective Registered Owners of the Bonds, and such moneys shall be and are hereby irrevocably appropriated to the payment and discharge thereof. All money and Defeasance Obligations deposited with the Paying Agent or other bank or trust company shall be deemed to be deposited in accordance with and subject to all of the provisions of this Ordinance.

ARTICLE VIII

MISCELLANEOUS PROVISIONS

Section 801. Tax Covenants. The City covenants and agrees to comply with all provisions and requirements of the Federal Tax Certificate, which is hereby approved, with such changes therein as shall be approved by the Mayor and the Bond Compliance Officer (as defined therein), which officers are hereby authorized to execute the Federal Tax Certificate for and on behalf of the City, such officer's signature thereon being conclusive evidence of his or her approval thereof.

Section 802. Annual Audit.

(a) Annually, promptly after the end of the Fiscal Year, the City will cause an audit to be made of its funds and accounts for the preceding Fiscal Year by an independent certified public accountant or firm of independent certified public accountants.

(b) Within 30 days after the completion of each such audit, a copy thereof shall be filed in the office of the City Clerk. Such audits shall at all times during the usual business hours be open to the examination and inspection by any taxpayer, any Registered Owner of any of the Bonds, or by anyone acting for or on behalf of such taxpayer or Registered Owner.

Section 803. Insurance. The City will carry and maintain fire and extended coverage insurance, either commercial or self-insured, upon all of the properties that constitute a part of the Project insofar as the same are or will be of an insurable nature and are financed or refinanced with the proceeds of the Bonds. Such insurance shall be in an amount at least equal to the lesser of (a) the amount of the Bonds then Outstanding or (b) the replacement cost thereof. In the event of loss or damage, the City, with reasonable dispatch, will use the proceeds of such insurance to reconstruct and replace the property damaged or destroyed. If reconstruction or replacement is unnecessary, the City will deposit the proceeds of such insurance into the Debt Service Fund.

Section 804. Amendments.

(a) Notwithstanding the City's obligations under the Continuing Disclosure Undertaking, which may be modified as provided therein, the rights and duties of the City and the Bondowners, and the terms and provisions of the Bonds or of this Ordinance, may be amended or modified at any time in any respect by ordinance of the City with the written consent of the Registered Owners of not less than a majority in principal amount of the Bonds then Outstanding, such consent to be evidenced by an instrument or instruments executed by such Registered Owners and duly acknowledged or proved in the manner of a deed to be recorded, and such instrument or instruments shall be filed with the City Clerk, but no such modification or alteration shall:

(i) extend the maturity of any payment of principal or interest due upon any Bond;

(ii) alter the optional Redemption Date of any Bond;

(iii) effect a reduction in the amount which the City is required to pay as principal of or interest on any Bond;

(iv) permit preference or priority of any Bond over any other Bond; or

(v) reduce the percentage in principal amount of Bonds required for the written consent to any modification or alteration of the provisions of this Ordinance.

(b) Any provision of the Bonds or of this Ordinance may, however, be amended or modified by ordinance duly adopted by the City Council at any time in any legal respect with the written consent of the Registered Owners of all of the Bonds at the time Outstanding.

(c) Without notice to or the consent of any Bondowners, the City may amend or supplement this Ordinance for the purpose of curing any formal defect, omission, inconsistency or ambiguity therein or in connection with any other change therein which is not materially adverse to the interests of the Bondowners.

(d) Every amendment or modification of the provisions of the Bonds or of this Ordinance, to which the written consent of the Bondowners is given, as above provided, shall be expressed in an ordinance adopted by the City Council amending or supplementing the provisions of this Ordinance and shall be deemed to be a part of this Ordinance. A certified copy of every such amendatory or supplemental ordinance, if any, and a certified copy of this Ordinance shall always be kept on file in the office of the City Clerk, shall be made available for inspection by the Registered Owner of any Bond or a prospective purchaser or owner of any Bond authorized by this Ordinance, and upon payment of the reasonable cost of preparing the same, a certified copy of any such amendatory or supplemental ordinance or of this Ordinance will be sent by the City Clerk to any such Bondowner or prospective Bondowner.

(e) Any and all modifications made in the manner hereinabove provided shall not become effective until there has been filed with the City Clerk a copy of the ordinance of the City hereinabove provided for, duly certified, as well as proof of any required consent to such modification by the Registered Owners of the Bonds then Outstanding. It shall not be necessary to note on any of the Outstanding Bonds any reference to such amendment or modification.

(f) The City shall furnish to the Paying Agent a copy of any amendment to the Bonds or this Ordinance which affects the duties or obligations of the Paying Agent under this Ordinance.

Section 805. Notices, Consents and Other Instruments by Bondowners.

(a) Any notice, consent, request, direction, approval or other instrument to be signed and executed by the Bondowners may be in any number of concurrent writings of similar tenor and may be signed or executed by such Bondowners in person or by agent appointed in writing. Proof of the execution of any such instrument or of the writing appointing any such agent and of the ownership of Bonds (other than the assignment of the ownership of a Bond as provided for in the form of Bond set forth in **Exhibit A** attached hereto), if made in the following manner, shall be sufficient for any of the purposes of this Ordinance, and shall be conclusive in favor of the City and the Paying Agent with regard to any action taken, suffered or omitted under any such instrument, namely:

(i) The fact and date of the execution by any person of any such instrument may be proved by a certificate of any officer in any jurisdiction who by law has power to take acknowledgments within such jurisdiction that the person signing such instrument acknowledged before such officer the execution thereof, or by affidavit of any witness to such execution.

(ii) The fact of ownership of Bonds, the amount or amounts, numbers and other identification of Bonds, and the date of holding the same shall be proved by the Bond Register.

(b) In determining whether the Registered Owners of the requisite principal amount of Bonds Outstanding have given any request, demand, authorization, direction, notice, consent or waiver under this Ordinance, Bonds owned by the City shall be disregarded and deemed not to be Outstanding under this Ordinance, except that, in determining whether the Bondowners shall be protected in relying upon any such request, demand, authorization, direction, notice, consent or waiver, only Bonds which the Bondowners know to be so owned shall be so disregarded. Notwithstanding the foregoing, Bonds so owned which have been pledged in good faith shall not be disregarded as aforesaid if the pledgee establishes to the satisfaction of the Bondowners the pledgee's right so to act with respect to such Bonds and that the pledgee is not the City.

Section 806. Continuing Disclosure. The City hereby covenants and agrees that it will comply with and carry out all of the provisions of the Continuing Disclosure Undertaking as originally executed and as it may be amended from time to time in accordance with the terms thereof. The Mayor is hereby authorized to execute the Continuing Disclosure Undertaking, in substantially the form attached hereto as **Exhibit C**, to make the Bonds subject to the Continuing Disclosure Undertaking. Upon the City's failure to comply with the Continuing Disclosure Undertaking, any Bondowner may take such actions as may be necessary and appropriate, including seeking mandamus or specific performance by court order, to cause the City to comply with its obligations under this Section. In no event will a default under the Continuing Disclosure Undertaking be considered a default pursuant to this Ordinance.

Section 807. Electronic Transactions. The transaction described herein may be conducted and related documents may be sent, received or stored by electronic means. Copies, telecopies, facsimiles, electronic files and other reproductions of original executed documents shall be deemed to be authentic and valid counterparts of such original documents for all purposes, including the filing of any claim, action or suit in the appropriate court of law.

Section 808. Further Authority. The officers of the City, including the Mayor, Director of Finance, City Clerk and Deputy City Clerk, are hereby authorized and directed to execute all documents and take such actions as they may deem necessary or advisable in order to carry out and perform the purposes of this Ordinance and to make ministerial alterations, changes or additions in the foregoing agreements, statements, instruments and other documents herein approved, authorized and confirmed

which they may approve, and the execution or taking of such action shall be conclusive evidence of such necessity or advisability.

Section 809. Parties Interested Herein. Nothing in this Ordinance expressed or implied is intended or shall be construed to confer upon, or to give or grant to, any person or entity, other than the City, the Paying Agent and the Bondowners, any right, remedy or claim under or by reason of this Ordinance or any covenant, condition or stipulation hereof, and all covenants, stipulations, promises and agreements in this Ordinance contained by and on behalf of the City shall be for the sole and exclusive benefit of the City, the Paying Agent and the Bondowners.

Section 810. Severability. If any section or other part of this Ordinance, whether large or small, is for any reason held invalid, the invalidity thereof shall not affect the validity of the other provisions of this Ordinance.

Section 811. Governing Law. This Ordinance shall be governed exclusively by and construed in accordance with the applicable laws of the State of Missouri.

Section 812. Effective Date. This Ordinance shall be in full force and effect from and after its passage and approval.

[Remainder of Page Intentionally Left Blank]

PASSED AND APPROVED by the City Council of the City of Florissant, Missouri, this 28th day of November, 2016.

Adopted this 28th day of November, 2016.

_____
President of the Council
City of Florissant

Approved this 28th day of November, 2016.

_____
Mayor, City of Florissant

(SEAL)

ATTEST:

_____
City Clerk

First Reading: November 14, 2016

EXHIBIT A
TO ORDINANCE

(FORM OF BONDS)

EXCEPT AS OTHERWISE PROVIDED IN THE ORDINANCE (DESCRIBED HEREIN), THIS GLOBAL BOND MAY BE TRANSFERRED, IN WHOLE BUT NOT IN PART, ONLY TO ANOTHER NOMINEE OF THE SECURITIES DEPOSITORY (DESCRIBED HEREIN) OR TO A SUCCESSOR SECURITIES DEPOSITORY OR TO A NOMINEE OF A SUCCESSOR SECURITIES DEPOSITORY.

UNITED STATES OF AMERICA
STATE OF MISSOURI

Registered **Registered**
No. _____ **$_____**

CITY OF FLORISSANT, MISSOURI

SPECIAL OBLIGATION BOND
SERIES 2016

Interest Rate	Maturity Date	Dated Date	CUSIP Number
_____%	November 1, ____	December 13, 2016	_____

REGISTERED OWNER: CEDE & CO.

PRINCIPAL AMOUNT: _____ DOLLARS

THE CITY OF FLORISSANT, MISSOURI, a municipal corporation and constitutional charter city operating under a home rule form of government and political subdivision of the State of Missouri (the "City"), for value received, hereby acknowledges itself to be indebted and promises to pay to the registered owner shown above, or registered assigns, the principal amount shown above on the maturity date shown above unless called for redemption prior to said maturity date and to pay interest thereon at the interest rate per annum shown above (computed on the basis of a 360-day year of twelve 30-day months) from the Dated Date shown above or from the most recent interest payment date to which interest has been paid or duly provided for, payable semiannually on May 1 and November 1 in each year, beginning on May 1, 2017, until said principal amount has been paid.

The principal or Redemption Price of this Bond shall be paid at maturity or upon earlier redemption by check, electronic transfer or draft to the person in whose name this Bond is registered at the maturity date or Redemption Date thereof, upon presentation and surrender of this Bond at the principal payment office of BOKF, NA, St. Louis, Missouri (the "Paying Agent"), or such other office

designated by the Paying Agent. The interest payable on this Bond on any interest payment date shall be paid to the person in whose name this Bond is registered on the registration books maintained by the Paying Agent at the close of business on the Record Date for such interest, which shall be the 15th day (whether or not a business day) of the calendar month next preceding the interest payment date. Such interest shall be payable (a) by check or draft mailed by the Paying Agent to the address of such Registered Owner shown on the Bond Register or (b) by electronic transfer to such Registered Owner upon written notice signed by such Owner, given to the Paying Agent, not less than 15 days prior to the Record Date for such interest, containing the electronic transfer instructions including the bank, ABA routing number and account number to which such Registered Owner wishes to have such transfer directed and an acknowledgment that an electronic transfer fee may be applicable. The principal or Redemption Price of and interest on the Bonds shall be payable by check or draft in any coin or currency that, on the respective dates of payment thereof, is legal tender for the payment of public and private debts.

This Bond is one of an authorized series of bonds of the City designated "Special Obligation Bonds, Series 2016," aggregating the principal amount of $_____ (the "Bonds"), issued by the City for the purpose of providing funds to (a) pay the costs of the Project and (b) pay the costs of issuing the Bonds, under the authority of and in full compliance with the City's Charter and the Constitution and laws of the State of Missouri, and pursuant to an ordinance duly passed (the "Ordinance") and proceedings duly and legally had by the City Council of the City. *Capitalized terms used herein and not otherwise defined herein shall have the meanings assigned to such terms in the Ordinance.*

At the option of the City, the Bonds or portions thereof maturing on November 1, 2025 and thereafter may be called for redemption and payment prior to their Stated Maturity on November 1, 2024 and thereafter as a whole or in part at any time in such order of maturity determined by the City (Bonds of less than a full maturity to be selected in multiples of $5,000 in such equitable manner as the Paying Agent shall designate) at the redemption price of 100% of the principal amount thereof plus accrued interest thereon to the redemption date.

[The Bonds maturing on November 1, 20___ are subject to mandatory redemption and payment prior to maturity pursuant to the mandatory redemption requirements of the Ordinance on November 1, 20___ and each November 1 thereafter to maturity at a redemption price equal to 100% of the principal amount thereof plus accrued interest to the redemption date.]

Notice of redemption, unless waived, is to be given by the Paying Agent by mailing an official redemption notice by first class mail at least 30 days but not more than 60 days prior to the Redemption Date to the Purchaser and each Registered Owner of the Bond or Bonds to be redeemed at the address shown on the Bond Register maintained by the Paying Agent. Notice of redemption having been given as aforesaid, the Bonds or portions of Bonds to be redeemed shall, on the Redemption Date, become due and payable at the Redemption Price therein specified, and from and after such date (unless the City defaults in the payment of the Redemption Price) such Bonds or portions of Bonds shall cease to bear interest.

The Bonds shall be special obligations of the City payable as to both principal and interest solely from annual appropriations of funds by the City for such purpose. The obligation of the City to make payments into the Debt Service Fund and any other obligations of the City to make payments under the Ordinance do not constitute a general obligation or indebtedness of the City for which the City is obligated to levy or pledge any form of taxation, or for which the City has levied or pledged any form of taxation and shall not be construed to be a debt of the City in contravention of any applicable constitutional, statutory or charter limitation or requirement but in each Fiscal Year shall be payable solely from the amounts pledged or appropriated therefor (a) out of the income and revenues provided for such year plus (b) any unencumbered balances for previous years.

The Bonds are issuable in the form of fully-registered Bonds in the denominations of $5,000 or any integral multiple thereof.

The Bonds are being issued by means of a book-entry system with no physical distribution of bond certificates to be made except as provided in the Ordinance. One Bond certificate with respect to each date on which the Bonds are stated to mature, registered in the nominee name of the Securities Depository, is being issued and required to be delivered to and immobilized with the Securities Depository or with the Paying Agent as the Securities Depository's FAST Agent. The book-entry system will evidence positions held in the Bonds by the Securities Depository's participants, beneficial ownership of the Bonds in authorized denominations being evidenced in the records of such participants. Transfers of ownership shall be effected on the records of the Securities Depository and its participants. The Paying Agent and the City will recognize the Securities Depository nominee, while the Registered Owner of this Bond, as the owner of this Bond for all purposes, including (a) payments of principal or Redemption Price of and interest on, this Bond, (b) notices and (c) voting. Transfers of principal or Redemption Price and interest payments to participants of the Securities Depository will be the responsibility of such participants and other nominees of such beneficial owners. The Paying Agent and the City will not be responsible or liable for such transfers of payments or for maintaining, supervising or reviewing the records maintained by the Securities Depository, the Securities Depository nominee, its participants or persons acting through such participants. While the Securities Depository nominee is the owner of this Bond, notwithstanding the provision hereinabove contained, payments of principal of and interest on this Bond shall be made in accordance with existing arrangements between the Paying Agent, the City and the Securities Depository.

EXCEPT AS OTHERWISE PROVIDED IN THE ORDINANCE, THIS GLOBAL BOND MAY BE TRANSFERRED, IN WHOLE BUT NOT IN PART, ONLY TO ANOTHER NOMINEE OF THE SECURITIES DEPOSITORY OR TO A SUCCESSOR SECURITIES DEPOSITORY OR TO A NOMINEE OF A SUCCESSOR SECURITIES DEPOSITORY.

This Bond may be transferred or exchanged, as provided in the Ordinance, only on the Bond Register kept for that purpose at the principal payment office of the Paying Agent, or such other office designated by the Paying Agent, upon surrender of this Bond together with a written instrument of transfer or authorization for exchange satisfactory to the Paying Agent duly executed by the Registered Owner or the Registered Owner's duly authorized agent, and thereupon a new Bond or Bonds in any authorized denomination of the same maturity and in the same aggregate principal amount shall be issued to the transferee in exchange therefor as provided in the Ordinance and upon payment of the charges therein prescribed. The City and the Paying Agent may deem and treat the Person in whose name this Bond is registered on the Bond Register as the absolute owner hereof for the purpose of receiving payment of, or on account of, the principal or Redemption Price hereof and interest due hereon and for all other purposes and neither the City nor the Paying Agent shall be effected by any notice to the contrary.

This Bond shall not be valid or become obligatory for any purpose or be entitled to any security or benefit under the Ordinance until the Certificate of Authentication hereon has been executed by the Paying Agent.

IT IS HEREBY DECLARED AND CERTIFIED that all acts, conditions and things required to be done and to exist precedent to and in the issuance of the Bonds have been done and performed and do exist in due and regular form and manner as required by the constitution and laws of the State of Missouri.

IN WITNESS WHEREOF, the **CITY OF FLORISSANT, MISSOURI**, has caused this Bond to be executed by the manual or facsimile signature of its Mayor and attested by the manual or facsimile signature of its City Clerk and its official seal to be affixed or imprinted hereon.

CERTIFICATE OF AUTHENTICATION

This Bond is one of the Bonds of the issue described in the within-mentioned Ordinance.

Registration Date: _____

BOKF, NA,
Paying Agent

By _____
Authorized Signatory

CITY OF FLORISSANT, MISSOURI

By: _____
Mayor

(Seal)

ATTEST:

_____
City Clerk

ASSIGNMENT

FOR VALUE RECEIVED, the undersigned hereby sells, assigns and transfers unto

_____

Print or Type Name, Address and Social Security Number
or other Taxpayer Identification Number of Transferee

the within Bond and all rights thereunder, and hereby irrevocably constitutes and appoints _____ agent to transfer the within Bond on the books kept by the Paying Agent for the registration thereof, with full power of substitution in the premises.

Dated: _____

_____

NOTICE: The signature to this assignment must correspond with the name of the Registered Owner as it appears upon the face of the within Bond in every particular.

Signature Guaranteed By:

_____

(Name of Eligible Guarantor Institution as defined by SEC Rule 17 Ad-15 (17 CFR 240.17 Ad-15))

By: _____
Title: _____

EXHIBIT B
TO ORDINANCE

PRELIMINARY OFFICIAL STATEMENT

[On file in the office of the City Clerk]

EXHIBIT C
TO ORDINANCE

CONTINUING DISCLOSURE UNDERTAKING

[On file in the office of the City Clerk]

EXHIBIT D
TO ORDINANCE

TERMS OF BONDS

1. Aggregate Principal Amount: Not to exceed $8,750,000.

2. Purchase Price: No less than 98% or more than 110% of the original principal amount of the Bonds.

3. Final Maturity: The Bonds shall not mature later than November 1, 2031.

4. True Interest Cost: Not to exceed 3.00%. "True Interest Cost" means the interest rate necessary to discount the debt service payments from the payment dates to the delivery date of the Bonds to an amount equal to the purchase price paid to the City. True Interest Cost is expressed as an annual percentage rate, and present value is computed on a semiannual basis using a 30/360 day-count convention.

5. Weighted Average Maturity: Not to exceed 9.5 years.

* * *

EXHIBIT E
TO ORDINANCE

FINAL TERMS CERTIFICATE

The undersigned, on behalf of the City of Florissant, Missouri (the "City"), in connection with the issuance of the City's Special Obligation Bonds, Series 2016 (the "Bonds"), certify pursuant to **Section 210** of the Ordinance authorizing the issuance of the Bonds adopted by the City Council on November 28, 2016 (the "Ordinance"), as follows:

1. Original Principal Amount. The Bonds are issued in the original principal amount of $_____.

2. Purchase Price. The purchase price of the Bonds, which is _____% of the original principal amount of the Bonds, is calculated as follows:

Original Principal Amount	$
Plus: Net Original Issue Premium	
Less: Underwriter's Discount	_____
Total Purchase Price	$_____

3. Final Maturity of the Bonds. The final maturity of the Bonds is November 1, 20___.

4. True Interest Cost. The True Interest Cost of the Bonds, determined in accordance with **Exhibit D** to the Ordinance, is _____%.

5. Weighted Average Maturity. The weighted average maturity of the Bonds is _____ years.

6. Maturity Schedule. The Bonds will mature on the dates and in the amounts and bear interest at the rates as follows:

Stated Maturity (November 1)	Principal Amount	Annual Rate of Interest	Stated Maturity (November 1)	Principal Amount	Annual Rate of Interest
2017	$	%	2025	$	%
2018			2026		
2019			2027		
2020			2028		
2021			2029		
2022			2030		
2023			2031		
2024					

*Term Bonds

7. Mandatory Sinking Fund Redemption. The Term Bonds identified in paragraph 6 are subject to mandatory sinking fund redemption on the dates and in the amounts as follows:

Stated Maturity (November 1)	Principal Amount
20___	$
20___+	

_____
+Final Maturity

8. Purchaser. The original purchaser of the Bonds is _____.

The terms set forth in this Certificate of Final Terms are within the limitations of **Exhibit D** to the Ordinance.

Delivered this ____ day of _____, 2016.

CITY OF FLORISSANT, MISSOURI

By: _____
Mayor

(SEAL)

ATTEST:

_____
City Clerk

CERTIFICATE

I, the undersigned, hereby certify that the above and foregoing is a true and correct copy of the Ordinance of the City of Florissant, Missouri, adopted by the City Council on November 28, 2016, authorizing the issuance of Special Obligation Bonds, Series 2016, as the same appears of record in my office, and that said Ordinance has not been modified, amended or repealed and is in full force and effect as of this date.

DATED: December 13, 2016.

(Seal)

_____

City Clerk of the City of
Florissant, Missouri

CONTINUING DISCLOSURE UNDERTAKING

Dated as of December 1, 2016

By the

CITY OF FLORISSANT, MISSOURI

$7,965,000*
Special Obligation Bonds
Series 2016

CONTINUING DISCLOSURE UNDERTAKING

This **CONTINUING DISCLOSURE UNDERTAKING** dated as of December 1, 2016 (this **"Continuing Disclosure Undertaking"**), is executed and delivered by the **CITY OF FLORISSANT, MISSOURI** (the **"City"**).

RECITALS

1. This Continuing Disclosure Undertaking is executed and delivered by the City in connection with the issuance and delivery of $7,965,000* aggregate principal amount of Special Obligation Bonds, Series 2016 (the **"Bonds"**), pursuant to an ordinance adopted by the City Council on November 28, 2016 (the **"Ordinance"**).

2. The City is entering into this Continuing Disclosure Undertaking for the benefit of the Beneficial Owners (defined herein) of the Bonds and in order to assist the Participating Underwriter (defined herein) in complying with Rule 15c2-12 of the Securities and Exchange Commission (**"Rule"**). The City is the only **"obligated person"** with responsibility for continuing disclosure hereunder.

In consideration of the covenants and agreements herein, the City covenants and agrees as follows:

Section 1. Definitions. In addition to the definitions set forth in the Ordinance, which apply to any capitalized term used in this Continuing Disclosure Undertaking unless otherwise defined in this Section, the following capitalized terms have the following meanings:

"Annual Report" means any Annual Report filed by the City pursuant to, and as described in, **Section 2** hereof.

"Beneficial Owner" means any registered owner of any Bonds and any person which (a) has the power, directly or indirectly, to vote or consent with respect to, or to dispose of ownership of, any Bonds (including persons holding Bonds through nominees, depositories or other intermediaries), or (b) is treated as the owner of any Bonds for federal income tax purposes.

"EMMA" means the Electronic Municipal Market Access system for municipal securities disclosures established and maintained by the MSRB, which can be accessed at www.emma.msrb.org.

"Material Events" means any of the events listed in **Section 3** hereof.

"MSRB" means the Municipal Securities Rulemaking Board, or any successor repository designated as such by the Securities and Exchange Commission in accordance with the Rule.

"Participating Underwriter" means any of the original underwriter(s) of the Bonds required to comply with the Rule in connection with the offering of the Bonds.

"Rule" means Rule 15c2-12(b)(5) adopted by the Securities and Exchange Commission under the Securities Exchange Act of 1934, as the same may be amended from time to time.

Section 2. Provision of Annual Reports.

(a) The City shall not later than **180** days after the end of the City's fiscal year, commencing with the fiscal year ending November 30, 2016, provide to the MSRB, through EMMA, the following financial information and operating data (the **"Annual Report"**):

(1) The audited financial statements of the City for the prior fiscal year. If audited financial statements are not available by the time the Annual Report is required to be filed pursuant to this Section, the Annual Report shall contain unaudited financial statements in a format similar to the financial statements contained in the final Official Statement relating to the Bonds, and the audited financial statements shall be filed in the same manner as the Annual Report promptly after they become available.

(2) Updates as of the end of the fiscal year of certain financial information and operating data contained in the final Official Statement for the Bonds, as described in **Exhibit A**, in substantially the same format contained in the final Official Statement.

Any or all of the items listed above may be included by specific reference to other documents, including official statements of debt issues with respect to which the City is an **"obligated person"** (as defined by the Rule), which have been filed with the MSRB and are available through EMMA or the Securities and Exchange Commission. If the document included by reference is a final official statement, it must be available from the MSRB on EMMA. The City will clearly identify each such other document so included by reference.

In each case, the Annual Report may be submitted as a single document or as separate documents comprising a package, and may cross-reference other information as provided in this Section; provided that the audited financial statements of the City may be submitted separately from the balance of the Annual Report and later than the date required above for the filing of the Annual Report if they are not available by that date. If the City's fiscal year changes, it will give notice of such change in the same manner as for a Material Event under **Section 3** hereof.

(b) In addition to the foregoing requirements of this Section, the City agrees to provide copies of the most recent Annual Report to any requesting Beneficial Owner or prospective Beneficial Owner, but only after the same have been filed with the MSRB.

Section 3. Reporting of Material Events. Not later than 10 business days after the occurrence of any of the following events, the City shall give, or cause to be given to the MSRB, through EMMA, notice of the occurrence of any of the following events with respect to the Bonds (**"Material Events"**):

(1) principal and interest payment delinquencies;
(2) non-payment related defaults, if material;
(3) unscheduled draws on debt service reserves reflecting financial difficulties;
(4) unscheduled draws on credit enhancements reflecting financial difficulties;
(5) substitution of credit or liquidity providers, or their failure to perform;

(6) adverse tax opinions; the issuance by the Internal Revenue Service of proposed or final determinations of taxability, Notices of Proposed Issue (IRS Form 5701-TEB) or other material notices or determinations with respect to the tax status of the Bonds, or other material events affecting the tax status of the Bonds;
(7) modifications to rights of bondholders, if material;
(8) bond calls, if material, and tender offers;
(9) defeasances;
(10) release, substitution or sale of property securing repayment of the Bonds, if material;
(11) rating changes;
(12) bankruptcy, insolvency, receivership or similar event of the City;
(13) the consummation of a merger, consolidation, or acquisition involving the City or the sale of all or substantially all of the assets of the City, other than in the ordinary course of business, the entry into a definitive agreement to undertake such an action or the termination of a definitive agreement relating to any such actions, other than pursuant to its terms, if material; and
(14) appointment of a successor or additional trustee or the change of name of the Paying Agent, if material.

If the City has not submitted the Annual Report or any required portion thereof to the MSRB by the date required in **Section 2(a)** hereof, the City will send a notice to the MSRB of the failure of the City to file on a timely basis the Annual Report, which notice will be given by the City in accordance with this **Section 3**.

Section 4. Termination of Reporting Obligation. The City's obligations under this Continuing Disclosure Undertaking shall terminate upon the legal defeasance, redemption or payment in full of all of the Bonds. If the City's obligations under this Continuing Disclosure Undertaking are assumed in full by some other entity, such person shall be responsible for compliance with this Continuing Disclosure Undertaking in the same manner as if it were the City, and the City shall have no further responsibility hereunder. If such termination or substitution occurs prior to the final maturity of the Bonds, the City shall give notice of such termination or substitution in the same manner as for a Material Event under **Section 3** hereof.

Section 5. Dissemination Agents. The City may, from time to time, appoint or engage a dissemination agent to assist it in carrying out its obligations under this Continuing Disclosure Undertaking, and may discharge any such agent, with or without appointing a successor dissemination agent. The dissemination agent may resign as dissemination agent hereunder at any time upon 30 days prior written notice to the City. The dissemination agent will not be responsible in any manner for the content of any notice or report (including without limitation the Annual Report) prepared by the City pursuant to this Continuing Disclosure Undertaking.

Section 6. Amendment; Waiver. Notwithstanding any other provision of this Continuing Disclosure Undertaking, the City may amend this Continuing Disclosure Undertaking and any provision of this Continuing Disclosure Undertaking may be waived, provided that Bond Counsel or other counsel experienced in federal securities law matters provides the City with its written opinion that the undertaking of the City contained herein, as so amended or after giving effect to such waiver, is in compliance with the Rule and all current amendments thereto and interpretations thereof that are applicable to this Continuing Disclosure Undertaking.

In the event of any amendment or waiver of a provision of this Continuing Disclosure Undertaking, the City shall describe such amendment or waiver in the next Annual Report, and shall include, as applicable, a narrative explanation of the reason for the amendment or waiver and its impact on the type (or, in the case of a change of accounting principles, on the presentation) of financial information or operating data being presented by the City. In addition, if the amendment relates to the accounting principles to be followed in preparing financial statements, (1) notice of such change shall be given in the same manner as for a Material Event under **Section 3**, and (2) the Annual Report for the year in which the change is made should present a comparison (in narrative form and also, if feasible, in quantitative form) between the financial statements as prepared on the basis of the new accounting principles and those prepared on the basis of the former accounting principles.

Section 7. Additional Information. Nothing in this Continuing Disclosure Undertaking will be deemed to prevent the City from disseminating any other information, using the means of dissemination set forth in this Continuing Disclosure Undertaking or any other means of communication, or including any other information in any Annual Report or notice of occurrence of a Material Event, in addition to that which is required by this Continuing Disclosure Undertaking. If the City chooses to include any information in any Annual Report or notice of occurrence of a Material Event, in addition to that which is specifically required by this Continuing Disclosure Undertaking, the City will have no obligation under this Continuing Disclosure Undertaking to update such information or include it in any future Annual Report or notice of occurrence of a Material Event.

Section 8. Default. If the City fails to comply with any provision of this Continuing Disclosure Undertaking, any Participating Underwriter or any Beneficial Owner of the Bonds may take such actions as may be necessary and appropriate, including seeking mandamus or specific performance by court order, to cause the City to comply with its obligations under this Continuing Disclosure Undertaking. A default under this Continuing Disclosure Undertaking will not be deemed an event of default under the Ordinance or the Bonds and the sole remedy under this Continuing Disclosure Undertaking in the event of any failure of the City to comply with this Continuing Disclosure Undertaking shall be an action to compel performance.

Section 9. Beneficiaries. This Continuing Disclosure Undertaking will inure solely to the benefit of the City, the Participating Underwriter, and Beneficial Owners from time to time of the Bonds, and shall create no rights in any other person or entity.

Section 10. Severability. If any provision in this Continuing Disclosure Undertaking, the Ordinance or the Bonds shall be invalid, illegal or unenforceable, the validity, legality and enforceability of the remaining provisions shall not in any way be affected or impaired thereby.

Section 11. Electronic Transactions. The arrangement described herein may be conducted and related documents may be stored by electronic means. Copies, telecopies, facsimiles, electronic files and other reproductions of original documents shall be deemed to be authentic and valid counterparts of such original documents for all purposes, including the filing of any claim, action or suit in the appropriate court of law.

Section 12. Governing Law. This Continuing Disclosure Undertaking shall be governed by and construed in accordance with the laws of the State of Missouri.

IN WITNESS WHEREOF, the City has caused this Continuing Disclosure Undertaking to be executed as of the 13th day of December, 2016.

CITY OF FLORISSANT, MISSOURI

By: _____
Name: Thomas P. Schneider
Title: Mayor

[Continuing Disclosure Undertaking]

EXHIBIT A

FINANCIAL INFORMATION AND OPERATING DATA TO BE INCLUDED IN ANNUAL REPORT

Updates of tables found under the following sections of Appendix A to the final Official Statement:

1. **"FINANCIAL INFORMATION CONCERNING THE CITY - The General Fund"** and **"- Sources of Revenue"**

2. **"DEBT STRUCTURE OF THE CITY - Debt Ratios and Related Information"** (except overlapping debt information)

3. **"PROPERTY TAX INFORMATION - Property Valuations"**

INTRODUCED BY COUNCIL AS A WHOLE
BILL NO. 9240 **ORDINANCE NO.**

AN ORDINANCE AUTHORIZING AND DIRECTING THE ISSUANCE, SALE AND DELIVERY OF SPECIAL OBLIGATION BONDS, SERIES 2016, OF THE CITY OF FLORISSANT, MISSOURI; AND APPROVING CERTAIN DOCUMENTS AND AUTHORIZING CERTAIN OTHER ACTIONS IN CONNECTION THEREWITH.

WHEREAS, the City of Florissant, Missouri (the "City"), is a municipal corporation and constitutional charter city operating under a home rule form of government, organized and existing under the constitution and laws of the State of Missouri; and

WHEREAS, the City desires to and is authorized under the provisions of the Constitution of the State of Missouri and its Charter to issue and sell Special Obligation Bonds, Series 2016 in an aggregate principal amount not to exceed $9,500,000 (the "Bonds") for the purpose of providing funds to (1) pay the costs of (a) making energy efficiency improvements to the civic center and (b) renovating and improving the municipal court building (collectively, the "Project"), and (2) pay the costs of issuing the Bonds; and

WHEREAS, the principal of and interest on the Bonds will be payable solely from the revenues derived from annual appropriations by the City Council; and

WHEREAS, it is hereby found and determined that it is necessary and advisable and in the best interest of the City and of its inhabitants that the Bonds be issued and secured in the form and manner as hereinafter provided to provide funds for such purposes;

NOW, THEREFORE, BE IT ORDAINED BY THE COUNCIL OF THE CITY OF FLORISSANT, MISSOURI, AS FOLLOWS:

ARTICLE I

DEFINITIONS

Section 101. Definitions of Words and Terms. In addition to words and terms defined elsewhere herein, the following words and terms as used in this Ordinance shall have the following meanings:

"Beneficial Owner" means whenever used with respect to a Bond, the person in whose name such Bond is recorded as the beneficial owner of such Bond by a Participant on the records of such Participant, or such person's subrogee.

"Bond Counsel" means Gilmore & Bell, P.C., St. Louis, Missouri, or other attorneys or firm of attorneys with a nationally recognized standing in the field of municipal bond financing selected by the City.

"Bond Payment Date" means any date on which principal or Redemption Price of or interest on any Bond is payable.

"Bond Register" means the books for the registration, transfer and exchange of Bonds kept at the office of the Paying Agent.

"Bondowner" or **"Registered Owner"** when used with respect to any Bond means the Person in whose name such Bond is registered on the Bond Register.

"Bonds" means the Special Obligation Bonds, Series 2016, authorized and issued by the City pursuant to this Ordinance.

"Business Day" means a day, other than a Saturday, Sunday or holiday, on which the Paying Agent is scheduled in the normal course of its operations to be open to the public for conduct of its banking operations.

"Cede & Co." means Cede & Co., the nominee of DTC, and any successor nominee of DTC with respect to the Bonds.

"City" means the City of Florissant, Missouri, and any successors or assigns.

"Code" means the Internal Revenue Code of 1986, as amended, and the applicable regulations of the Treasury Department proposed or promulgated thereunder.

"Continuing Disclosure Undertaking" means the Continuing Disclosure Undertaking dated as of December 1, 2016.

"Debt Service Fund" means the fund by that name referred to in **Section 501** hereof.

"Defaulted Interest" means interest on any Bond which is payable but not paid on any Interest Payment Date.

"Defeasance Obligations" means any of the following obligations:

(a) cash (insured at all times by the Federal Deposit Insurance Corporation (or otherwise collateralized with obligations described in paragraph (b) or (c) below); or

(b) United States Government Obligations that are not subject to redemption in advance of their maturity dates; or

(c) obligations of any state or political subdivision of any state, the interest on which is excluded from gross income for federal income tax purposes and which meet the following conditions:

(1) the obligations are (A) not subject to redemption prior to maturity or (B) the trustee for such obligations has been given irrevocable instructions concerning their calling and redemption and the issuer of such obligations has covenanted not to redeem such obligations other than as set forth in such instructions;

(2) the obligations are secured by cash or United States Government Obligations that may be applied only to principal of, premium, if any, and interest payments on such obligations;

(3) such cash and the principal of and interest on such United States Government Obligations serving as security for the obligations (plus any cash in the escrow fund) are sufficient to meet the liabilities of the obligations;

(4) such cash and United States Government Obligations serving as security for the obligations are held in an escrow fund by an escrow agent or a trustee irrevocably in trust;

(5) such cash and United States Government Obligations serving as security for the obligations are not available to satisfy any other claims, including those against the trustee or escrow agent; and

(6) the obligations are rated in the same rating category as United States Government Obligations or higher by a nationally recognized rating service.

"DTC" means The Depository Trust Company of New York, New York.

"FAST Agent" means the Paying Agent when acting as agent for DTC in accordance with rules established by DTC for Fast Automated Securities Transfers.

"Federal Tax Certificate" means the Federal Tax Certificate dated December 13, 2016 relating to the Bonds, executed by the City, as the same may be amended or supplemented in accordance with the provisions thereof.

"Fiscal Year" means the fiscal year of the City, currently the period beginning December 1 and ending November 30.

"Final Terms Certificate" means the Final Terms Certificate, in substantially the form attached hereto as **Exhibit E**, executed and delivered by the Mayor pursuant to **Section 210** hereof and attached to this Ordinance as of the date of issuance of the Bonds.

"Interest Payment Date" means the Stated Maturity of an installment of interest on any Bond.

"Maturity" when used with respect to any Bond means the date on which the principal of such Bond becomes due and payable as therein and herein provided, whether at the Stated Maturity thereof or call for redemption or otherwise.

"Ordinance" means this Ordinance authorizing the issuance of the Bonds, as amended from time to time.

"Outstanding" means, when used with reference to Bonds, as of any particular date of determination, all Bonds theretofore authenticated and delivered hereunder, except the following Bonds:

(a) Bonds theretofore canceled by the Paying Agent or delivered to the Paying Agent for cancellation;

(b) Bonds deemed to be paid in accordance with the provisions of **Section 701** hereof; and

(c) Bonds in exchange for or in lieu of which other Bonds have been authenticated and delivered hereunder.

"Participant" means any broker-dealer, bank or other financial institution for which DTC holds Bonds as securities depository.

"Paying Agent" means BOKF, NA, St. Louis, Missouri, and any successors or assigns.

"Permitted Investments" means any securities or investments that are lawful for the investment of the City's moneys held in such funds or accounts under the laws of the State of Missouri.

"Person" means any natural person, corporation, partnership, limited liability company, joint venture, association, firm, joint-stock company, trust, unincorporated organization, or government or any agency or political subdivision thereof or other public body.

"Preliminary Official Statement" means the Preliminary Official Statement, in substantially the form attached hereto as **Exhibit B**.

"Project" means (a) making energy efficiency improvements to the civic center and (b) renovating and improving the municipal court building.

"Project Fund" means the fund by that name referred to in **Section 501** hereof.

"Purchaser" means the original purchaser of the Bonds, identified in the Final Terms Certificate.

"Rebate Fund" means the fund by that name referred to in **Section 501** hereof.

"Record Date" for the interest payable on any Interest Payment Date means the 15th day (whether or not a Business Day) of the calendar month next preceding such Interest Payment Date.

"Redemption Date" when used with respect to any Bond to be redeemed means the date fixed for such redemption pursuant to the terms of this Ordinance.

"Redemption Price" when used with respect to any Bond to be redeemed means the price at which such Bond is to be redeemed pursuant to the terms of this Ordinance, including the applicable redemption premium, if any, but excluding installments of interest whose Stated Maturity is on or before the Redemption Date, which price is to be stated as a percentage of the principal amount of those Bonds to be redeemed.

"Representation Letter" means the Representation Letter from the City and the Paying Agent to DTC with respect to the Bonds.

"Special Record Date" means the date fixed by the Paying Agent pursuant to **Section 204** hereof for the payment of Defaulted Interest.

"Stated Maturity" when used with respect to any Bond or any installment of interest thereon means the date specified in such Bond and this Ordinance as the fixed date on which the principal of such Bond or such installment of interest is due and payable.

"United States Government Obligations" means bonds, notes, certificates of indebtedness, treasury bills or other securities constituting direct obligations of, or obligations the principal of and interest on which are fully and unconditionally guaranteed as to full and timely payment by, the United States of America, including evidences of a direct ownership interest in future interest or principal payments on obligations issued or guaranteed by the United States of America (including the interest

component of obligations of the Resolution Funding Corporation), or securities which represent an undivided interest in such obligations, which obligations are rated in the same rating category as the United States of America or higher by a nationally recognized rating service and such obligations are held in a custodial account for the benefit of the City.

ARTICLE II

AUTHORIZATION OF BONDS

Section 201. Authorization of Bonds. There shall be issued and hereby are authorized and directed to be issued the Special Obligation Bonds, Series 2016, of the City in an original principal amount not to exceed $9,500,000, as set forth in the Final Terms Certificate, subject to the limitations set forth in **Exhibit D** attached hereto, which are being issued for the purpose of providing funds to (a) pay the costs of the Project and (b) pay the costs of issuing the Bonds.

Section 202. Description of Bonds. The Bonds shall consist of fully-registered bonds, numbered from R–1 upward in order of issuance, in denominations of $5,000 or any integral multiple thereof. The Bonds shall be substantially in the form set forth in **Exhibit A** attached hereto, and shall be subject to registration, transfer and exchange as provided in **Section 205** hereof. All of the Bonds shall be dated the date of original issuance and delivery thereof, and shall become due in the amounts on the Stated Maturities, subject to redemption and payment prior to their Stated Maturities as provided in **Article III** hereof, set forth in the Final Terms Certificate.

The Bonds shall bear interest at the rates per annum (computed on the basis of a 360-day year of twelve 30-day months) set forth in the Final Terms Certificate from the date thereof or from the most recent Interest Payment Date to which interest has been paid or duly provided for, payable semiannually on May 1 and November 1 in each year, beginning on May 1, 2017.

Section 203. Designation of Paying Agent.

(a) BOKF, NA, St. Louis, Missouri (the "Paying Agent") is hereby designated as the City's paying agent for the payment of principal of and interest on the Bonds and bond registrar with respect to the registration, transfer and exchange of Bonds.

(b) The City will at all times maintain a Paying Agent meeting the qualifications herein described for the performance of the duties hereunder. The City reserves the right to appoint a successor Paying Agent by (i) filing with the Paying Agent then performing such function a certified copy of the proceedings giving notice of the termination of such Paying Agent and appointing a successor, and (ii) causing notice of the appointment of the successor Paying Agent to be given by first class mail to each Bondowner. The Paying Agent may resign by giving written notice by first class mail to the City and the Bondowners not less than 60 days prior to the date such resignation is to take effect. No resignation or removal of the Paying Agent shall become effective until a successor has been appointed and has accepted the duties of Paying Agent.

(c) Every Paying Agent appointed hereunder shall at all times be a commercial banking association or corporation or trust company located in the State of Missouri organized and doing business under the laws of the United States of America or of the State of Missouri, authorized under such laws to exercise trust powers and subject to supervision or examination by federal or state regulatory authority.

(d) The Paying Agent shall be paid its fees and expenses for its services in connection with the Bonds.

Section 204. Method and Place of Payment of Bonds.

(a) The principal or Redemption Price of and interest on the Bonds shall be payable in any coin or currency of the United States of America that, on the respective dates of payment thereof, is legal tender for the payment of public and private debts.

(b) The principal or Redemption Price of each Bond shall be paid at Maturity by check, electronic transfer or draft to the Person in whose name such Bond is registered on the Bond Register at the Maturity thereof, upon presentation and surrender of such Bond at such payment office designated by the Paying Agent.

(c) The interest payable on each Bond on any Interest Payment Date shall be paid to the Registered Owner of such Bond as shown on the Bond Register at the close of business on the Record Date for such interest (i) by check or draft mailed by the Paying Agent to the address of such Registered Owner shown on the Bond Register or (ii) by electronic transfer to such Registered Owner upon written notice signed by such Registered Owner and given to the Paying Agent not less than 15 days prior to the Record Date for such interest, containing the electronic transfer instructions including the bank, ABA routing number and account number to which such Registered Owner wishes to have such transfer directed and an acknowledgment that an electronic transfer fee may be applicable.

(d) Notwithstanding the foregoing provisions of this Section, any Defaulted Interest with respect to any Bond shall cease to be payable to the Registered Owner of such Bond on the relevant Record Date and shall be payable to the Registered Owner in whose name such Bond is registered at the close of business on the Special Record Date for the payment of such Defaulted Interest, which Special Record Date shall be fixed as hereinafter specified in this paragraph. The City shall notify the Paying Agent in writing of the amount of Defaulted Interest proposed to be paid on each Bond and the date of the proposed payment (which date shall be at least 30 days after receipt of such notice by the Paying Agent unless the City and the Paying Agent agree to a shorter time period) and shall deposit with the Paying Agent at the time of such notice an amount of money equal to the aggregate amount proposed to be paid in respect of such Defaulted Interest or shall make arrangements satisfactory to the Paying Agent for such deposit prior to the date of the proposed payment. Following receipt of such funds the Paying Agent shall fix a Special Record Date for the payment of such Defaulted Interest which shall be not more than 15 nor less than 10 days prior to the date of the proposed payment, unless the City and the Paying Agent agree to a shorter time period. The Paying Agent shall promptly notify the City of such Special Record Date and, in the name and at the expense of the City, shall cause notice of the proposed payment of such Defaulted Interest and the Special Record Date therefor to be mailed, by first class mail, postage prepaid, to each Registered Owner of a Bond entitled to such notice at the address of such Registered Owner as it appears on the Bond Register on such Special Record Date.

(e) The Paying Agent shall keep a record of the payment of principal and Redemption Price of and interest on all Bonds and, upon the City's written request, at least annually forward a copy or summary of such records to the City.

Section 205. Registration, Transfer and Exchange of Bonds.

(a) The City covenants that, as long as any of the Bonds remain Outstanding, it will cause the Bond Register to be kept at the office of the Paying Agent or such other office designated by the Paying

Agent for the registration, transfer and exchange of Bonds as herein provided. Each Bond when issued shall be registered in the name of the owner thereof on the Bond Register.

(b) Bonds may be transferred and exchanged only on the Bond Register as provided in this Section. Upon surrender of any Bond at the principal payment office of the Paying Agent, or such other office designated by the Paying Agent, the Paying Agent shall transfer or exchange such Bond for a new Bond or Bonds in any authorized denomination of the same Stated Maturity and in the same aggregate principal amount as the Bond that was presented for transfer or exchange. Bonds presented for transfer or exchange shall be accompanied by a written instrument or instruments of transfer or authorization for exchange, in a form and with guarantee of signature satisfactory to the Paying Agent, duly executed by the Registered Owner thereof or by the Registered Owner's duly authorized agent.

(c) In all cases in which the privilege of transferring or exchanging Bonds is exercised, the Paying Agent shall authenticate and deliver Bonds in accordance with the provisions of this Ordinance. The City shall pay the fees and expenses of the Paying Agent for the registration, transfer and exchange of Bonds provided for by this Ordinance and the cost of printing a reasonable supply of registered bond blanks. Any additional costs or fees that might be incurred in the secondary market, other than fees of the Paying Agent, are the responsibility of the Registered Owners of the Bonds. If any Registered Owner fails to provide a correct taxpayer identification number to the Paying Agent, the Paying Agent may make a charge against such Registered Owner sufficient to pay any governmental charge required to be paid as a result of such failure. In compliance with Section 3406 of the Code, such amount may be deducted by the Paying Agent from amounts otherwise payable to such Registered Owner hereunder or under the Bonds.

(d) The City and the Paying Agent shall not be required to (i) register the transfer or exchange of any Bond that has been called for redemption after notice of such redemption has been mailed by the Paying Agent pursuant to **Section 303** hereof and during the period of 15 days next preceding the date of mailing of such notice of redemption, or (ii) register the transfer or exchange of any Bond during a period beginning at the opening of business on the day after receiving written notice from the City of its intent to pay Defaulted Interest and ending at the close of business on the date fixed for the payment of Defaulted Interest pursuant to **Section 204** hereof.

(e) The City and the Paying Agent may deem and treat the Person in whose name any Bond is registered on the Bond Register as the absolute owner of such Bond, whether such Bond is overdue or not, for the purpose of receiving payment of, or on account of, the principal or Redemption Price of and interest on said Bond and for all other purposes. All payments so made to any such Registered Owner or upon the Registered Owner's order shall be valid and effective to satisfy and discharge the liability upon such Bond to the extent of the sum or sums so paid, and neither the City nor the Paying Agent shall be affected by any notice to the contrary.

(f) At reasonable times and under reasonable regulations established by the Paying Agent, the Bond Register may be inspected and copied by the Registered Owners of 10% or more in principal amount of the Bonds then Outstanding or any designated representative of such Registered Owners whose authority is evidenced to the satisfaction of the Paying Agent.

Section 206. Execution, Registration, Authentication and Delivery of Bonds.

(a) Each of the Bonds, including any Bonds issued in exchange or as substitutions for the Bonds initially delivered, shall be signed by the manual or facsimile signature of the Mayor and attested by the manual or facsimile signature of the City Clerk and shall have the official seal of the City affixed or imprinted thereon. In case any officer whose signature appears on any Bond ceases to be such officer

before the delivery of such Bond, such signature shall nevertheless be valid and sufficient for all purposes, as if such person had remained in office until delivery. Any Bond may be signed by such persons who at the actual time of the execution of such Bond are the proper officers to sign such Bond although at the date of such Bond such persons may not have been such officers.

(b) The Mayor and City Clerk are hereby authorized and directed to prepare and execute the Bonds in the manner herein specified, and, when duly executed and registered, to deliver the Bonds to the Paying Agent for authentication.

(c) The Bonds shall have endorsed thereon a certificate of authentication substantially in the form set forth in **Exhibit A** attached hereto, which shall be manually executed by an authorized signatory of the Paying Agent, but it shall not be necessary that the same signatory sign the certificate of authentication on all of the Bonds that may be issued hereunder at any one time. No Bond shall be entitled to any security or benefit under this Ordinance or be valid or obligatory for any purpose unless and until such certificate of authentication has been duly executed by the Paying Agent. Such executed certificate of authentication upon any Bond shall be conclusive evidence that such Bond has been duly authenticated and delivered under this Ordinance. Upon authentication, the Paying Agent shall deliver the Bonds to or upon the order of the Purchaser, or shall hold the Bonds as FAST Agent for the benefit of the Beneficial Owners (as hereinafter defined), upon payment to the City of the purchase price of the Bonds plus accrued interest thereon, if any, to the date of their delivery.

Section 207. Mutilated, Destroyed, Lost and Stolen Bonds.

(a) If (i) any mutilated Bond is surrendered to the Paying Agent or the Paying Agent receives evidence to its satisfaction of the destruction, loss or theft of any Bond, and (ii) there is delivered to the Paying Agent such security or indemnity as may be required by the Paying Agent to save each of the City and the Paying Agent harmless, then, in the absence of notice to the Paying Agent that such Bond has been acquired by a bona fide purchaser, the City shall execute and the Paying Agent shall authenticate and deliver, in exchange for or in lieu of any such mutilated, destroyed, lost or stolen Bond, a new Bond of the same Stated Maturity and of like tenor and principal amount.

(b) If any such mutilated, destroyed, lost or stolen Bond has become or is about to become due and payable, the Paying Agent, in its discretion, may pay such Bond instead of delivering a new Bond.

(c) Upon the issuance of any new Bond under this Section, the City or the Paying Agent may require the payment by the Registered Owner of a sum sufficient to cover any tax or other governmental charge that may be imposed in relation thereto and any other expenses (including the fees and expenses of the Paying Agent) connected therewith.

(d) Every new Bond issued pursuant to this Section shall constitute a replacement of the City's prior obligation, and shall be entitled to all the benefits of this Ordinance equally and ratably with all other Outstanding Bonds.

Section 208. Cancellation and Destruction of Bonds Upon Payment. All Bonds that have been paid or redeemed or that otherwise have been surrendered to the Paying Agent, either at or before Maturity, shall be canceled by the Paying Agent immediately upon the payment, redemption and surrender thereof to the Paying Agent and subsequently destroyed in accordance with the customary practices of the Paying Agent. The Paying Agent shall execute a certificate in duplicate describing the Bonds so canceled and shall file an executed counterpart of such certificate with the City.

Section 209. Preliminary and Final Official Statement.

(a) The Preliminary Official Statement, in substantially the form attached hereto as **Exhibit B**, is hereby ratified and approved, and the final Official Statement is hereby authorized and approved by supplementing, amending and completing the Preliminary Official Statement, with such changes and additions thereto as are necessary to conform to and describe the transaction. The Mayor is hereby authorized to execute the final Official Statement as so supplemented, amended and completed, and the use and public distribution of the final Official Statement by the Purchaser in connection with the reoffering of the Bonds is hereby authorized. The proper officials of the City are hereby authorized to execute and deliver a certificate pertaining to such Official Statement as prescribed therein, dated as of the date of payment for and delivery of the Bonds.

(b) The City agrees to provide to the Purchaser within seven business days of the date of the sale of Bonds sufficient copies of the final Official Statement to enable the Purchaser to comply with the requirements of Rule 15c2-12(b)(4) of the Securities and Exchange Commission (the "SEC") and with the requirements of Rule G-32 of the Municipal Securities Rulemaking Board (the "MSRB").

Section 210. Sale of Bonds.

(a) The City agrees to sell the Bonds to the Purchaser at the purchase price set forth in the Final Terms Certificate, upon the terms and conditions set forth therein and with such changes therein as shall be approved by the Mayor and Director of Finance.

(b) The Mayor or Director of Finance are hereby authorized to, without any further authorization or direction from the City Council, (1) approve the purchase price for the Bonds, the principal amounts by maturity, the interest rates, the optional redemption provisions, and the other final terms of the Bonds, subject to the limitations set forth in **Exhibit D** attached hereto, (2) execute the Final Terms Certificate in substantially the form attached to this Ordinance as **Exhibit E**, and (3) award the sale of the Bonds or reject all bids, for and on behalf of and as the act and deed of the City, which approval will be conclusively evidenced by the execution by the Mayor of the Final Terms Certificate, provided that the final terms of the Bonds set forth therein shall meet all of the requirements of this Ordinance and the Notice of Bond Sale. Upon execution, the Final Terms Certificate will be attached and made part of this Ordinance. The City Clerk is authorized and directed to attest the execution of the Final Terms Certificate and any other documents, certificates and instruments that are necessary or desirable to carry out the intent of this Ordinance.

Section 211. Securities Depository.

(a) The Bonds shall be initially issued as one single authenticated fully registered bond for each Stated Maturity. Upon initial issuance, the ownership of such Bonds shall be registered in the Bond Register of the City kept by the Paying Agent in the name of Cede & Co., as nominee of DTC. The Paying Agent and the City may treat DTC (or its nominee) as the sole and exclusive owner of the Bonds registered in its name for the purposes of payment of the principal or Redemption Price of or interest on the Bonds, selecting the Bonds or portions thereof to be redeemed, giving any notice permitted or required to be given to Registered Owners of Bonds under this Ordinance, registering the transfer of Bonds, and for all other purposes whatsoever; and neither the Paying Agent nor the City shall be affected by any notice to the contrary. Neither the Paying Agent nor the City shall have any responsibility or obligation to any Participant, any person claiming a beneficial ownership interest in the Bonds under or through DTC or any Participant, or any other person which is not shown on the Bond Register kept by the Paying Agent as being a Registered Owner of any Bonds, with respect to the accuracy of any records maintained by DTC or any Participant, with respect to the payment by DTC or any Participant of any

amount with respect to the principal or Redemption Price of or interest on the Bonds, with respect to any notice which is permitted or required to be given to Owners of Bonds under this Ordinance, with respect to the selection by DTC or any Participant of any Person to receive payment in the event of a partial redemption of the Bonds, or with respect to any consent given or other action taken by DTC as Registered Owner of the Bonds. The Paying Agent shall pay all principal of and interest on the Bonds only to Cede & Co. in accordance with the Representation Letter, and all such payments shall be valid and effective to fully satisfy and discharge the City's obligations with respect to the principal or Redemption Price of and interest on the Bonds to the extent of the sum or sums so paid. No person other than DTC (or the Paying Agent as Fast Agent) shall receive an authenticated Bond for each separate stated maturity evidencing the obligation of the City to make payments of principal or Redemption Price of and interest. Upon delivery by DTC to the Paying Agent of written notice to the effect that DTC has determined to substitute a new nominee in place of Cede & Co., the Bonds will be transferable to such new nominee in accordance with paragraph (d) hereof.

(b) If Participants holding a majority position in the Bonds determine that it is in the best interest of the Beneficial Owners that they be able to obtain certificated bonds, the Participants may notify DTC and the Paying Agent, whereupon DTC shall notify the Participants of the availability through DTC of bonds. In such event, the Bonds will be transferable in accordance with paragraph (d) hereof. DTC may determine to discontinue providing its services with respect to the Bonds at any time by giving notice to the City and the Paying Agent and discharging its responsibilities with respect thereto under applicable law. In such event the Bonds will be transferable in accordance with paragraph (d) hereof.

(c) Notwithstanding any other provision of this Ordinance to the contrary, so long as any Bond is registered in the name of Cede & Co., as nominee of DTC, all payments with respect to the principal or Redemption Price of and interest on such Bond and all notices with respect to such Bond shall be made and given, respectively, to DTC as provided in the Representation Letter.

(d) If any transfer or exchange of Bonds is permitted under paragraph (a) or (b) hereof, such transfer or exchange shall be accomplished upon receipt by the Paying Agent from the Registered Owners thereof of the Bonds to be transferred or exchanged and appropriate instruments of transfer to the permitted transferee in accordance with the provisions of this Ordinance. If Bonds are issued to holders other than Cede & Co., its successor as nominee for DTC as holder of all the Bonds, or other securities depository as holder of all the Bonds, the provisions of this Ordinance shall also apply to all matters relating thereto, including, without limitation, the printing of such Bonds and the method of payment of the principal of and interest on such Bonds. In the event that Bonds are issued to holders other than DTC, the Paying Agent may rely on information provided by DTC or any Participant as to the names, addresses of and principal amounts held by the beneficial owners of the Bonds.

ARTICLE III

REDEMPTION OF BONDS

Section 301. Redemption of Bonds.

(a) *Optional Redemption.* At the option of the City, the Bonds or portions thereof maturing on November 1, 2025 and thereafter may be called for redemption and payment prior to their Stated Maturity on November 1, 2024 and thereafter as a whole or in part at any time at the Redemption Price of 100% of the principal amount thereof, plus accrued interest thereon to the Redemption Date.

(b) *Mandatory Redemption.* Any Bonds subject to mandatory redemption and payment prior to their stated maturity (the "Term Bonds") designated in the Final Terms Certificate shall be subject to the following mandatory redemption requirements. At its option, to be exercised on or before the 45th day next preceding any mandatory Redemption Date, the City may: (1) deliver to the Paying Agent for cancellation Term Bonds subject to mandatory redemption on said mandatory Redemption Date, in any aggregate principal amount desired, (2) furnish the Paying Agent funds, together with appropriate instructions, for the purpose of purchasing any Term Bonds subject to mandatory redemption on said mandatory Redemption Date from any Registered Owner thereof whereupon the Paying Agent shall expend such funds for such purpose to such extent as may be practical, or (3) receive a credit with respect to the mandatory redemption obligation of the City under this Section for any Term Bonds subject to mandatory redemption on said mandatory Redemption Date which, prior to such date, have been redeemed (other than through the operation of the mandatory redemption requirements of this subsection (b)) and cancelled by the Paying Agent and not theretofore applied as a credit against any redemption obligation under this subsection (b). Each Term Bond so delivered or previously purchased or redeemed shall be credited at 100% of the principal amount thereof on the obligation of the City to redeem Term Bonds of the same Stated Maturity on such mandatory Redemption Date, and any excess of such amount shall be credited on future mandatory redemption obligations for Term Bonds of the same Stated Maturity in chronological order, and the principal amount of Term Bonds of the same Stated Maturity to be redeemed by operation of the requirements of this Section shall be accordingly reduced. If the City intends to exercise any option granted by the provisions of clauses (1), (2) or (3) above, the City will, on or before the 45th day next preceding each mandatory Redemption Date, furnish the Paying Agent a written certificate indicating to what extent the provisions of said clauses (1), (2) and (3) are to be complied with respect to such mandatory redemption payment.

Section 302. Selection of Bonds to be Redeemed.

(a) The Paying Agent shall call Bonds for redemption and payment and shall give notice of such redemption as herein provided upon receipt by the Paying Agent at least 45 days prior to the Redemption Date of the City's written instructions specifying the principal amount, Stated Maturities, Redemption Date and Redemption Prices of the Bonds to be called for redemption. If the Bonds are refunded more than 90 days in advance of the Redemption Date, any escrow agreement entered into by the City in connection with the refunding shall provide that the written instructions to the Paying Agent shall be given by the escrow agent on the City's behalf not less than 45 days prior to the Redemption Date. The Paying Agent may in its discretion waive such notice period so long as the notice requirements set forth in **Section 303** hereof are met. The foregoing provisions of this paragraph shall not apply to the mandatory redemption of Bonds hereunder, and Term Bonds shall be called by the Paying Agent for redemption pursuant to such mandatory redemption requirements without the necessity of any action by the City and whether or not the Paying Agent shall hold in the Debt Service Fund moneys available and sufficient to effect the required redemption.

(b) Bonds shall be redeemed only in the principal amount of $5,000 or any integral multiple thereof. When less than all of the Outstanding Bonds are to be redeemed, such Bonds shall be redeemed in such order of their Stated Maturities as shall be determined by the City, and Bonds of less than a full Stated Maturity shall be selected by the Paying Agent in $5,000 units of principal amount in such equitable manner as the Paying Agent may determine in its discretion.

(c) In the case of a partial redemption of Bonds when Bonds of denominations greater than $5,000 are then Outstanding, then for all purposes in connection with such redemption each $5,000 of face value shall be treated as though it were a separate Bond of the denomination of $5,000. If it is determined that one or more, but not all, of the $5,000 units of face value represented by any Bond are selected for redemption, then upon notice of intention to redeem such $5,000 unit or units, the Registered

Owner of such Bond or the Registered Owner's duly authorized agent shall present and surrender such Bond to the Paying Agent (i) for payment of the Redemption Price and interest to the Redemption Date of such $5,000 unit or units of face value called for redemption, and (ii) for exchange, without charge to the Registered Owner thereof, for a new Bond or Bonds of the aggregate principal amount of the unredeemed portion of the principal amount of such Bond. If the Registered Owner of any such Bond fails to present such Bond to the Paying Agent for payment and exchange as aforesaid, such Bond shall, nevertheless, become due and payable on the Redemption Date to the extent of the $5,000 unit or units of face value called for redemption (and to that extent only).

Section 303. Notice and Effect of Call for Redemption.

(a) Unless waived by any Registered Owner of Bonds to be redeemed, official notice of any redemption shall be given by the Paying Agent on the City's behalf by mailing a copy of an official redemption notice by first class mail at least 30 days but not more than 60 days prior to the Redemption Date to the Purchaser of the Bonds and each Registered Owner of the Bond or Bonds to be redeemed at the address shown on the Bond Register.

(b) All official notices of redemption shall be dated and shall contain the following information:

(i) the Redemption Date;

(ii) the Redemption Price;

(iii) if less than all Outstanding Bonds are to be redeemed, the identification number, Stated Maturity and, in the case of partial redemption of any Bonds, the respective principal amounts of the Bonds to be redeemed;

(iv) a statement that on the Redemption Date the Redemption Price will become due and payable upon each such Bond or portion thereof called for redemption and that interest thereon shall cease to accrue from and after the Redemption Date; and

(v) the place where such Bonds are to be surrendered for payment of the Redemption Price.

(c) Prior to any Redemption Date, the City shall deposit with the Paying Agent an amount of money sufficient to pay the Redemption Price of all the Bonds or portions of Bonds that are to be redeemed on such Redemption Date.

(d) With respect to optional redemptions, such notice may be conditioned upon moneys being on deposit with the Paying Agent on or prior to the Redemption Date in an amount sufficient to pay the Redemption Price on the Redemption Date. If such notice is conditional and either the Paying Agent receives written notice from the City that moneys sufficient to pay the Redemption Price will not be on deposit on the Redemption Date, or such moneys are not received on the Redemption Date, then such notice shall be of no force and effect, the Paying Agent shall not redeem such Bonds and the Paying Agent shall give notice, in the same manner in which the notice of redemption was given, that such moneys were not or will not be so received and that such Bonds will not be redeemed.

(e) Official notice of redemption having been given as aforesaid, the Bonds or portions of Bonds to be redeemed shall become due and payable on the Redemption Date, at the Redemption Price therein specified, and from and after the Redemption Date (unless the City defaults in the payment of the

Redemption Price) such Bonds or portion of Bonds shall cease to bear interest. Upon surrender of such Bonds for redemption in accordance with such notice, the Redemption Price of such Bonds shall be paid by the Paying Agent. Installments of interest due on or prior to the Redemption Date shall be payable as herein provided for payment of interest. Upon surrender for any partial redemption of any Bond, the Paying Agent shall prepare for the Registered Owner a new Bond or Bonds of the same Stated Maturity in the amount of the unpaid principal as provided herein. All Bonds that have been surrendered for redemption shall be canceled and destroyed by the Paying Agent as provided herein and shall not be reissued.

(f) The failure of any Registered Owner to receive the foregoing notice or any defect therein shall not invalidate the effectiveness of the call for redemption of any other Bond.

(g) In addition to the foregoing notice, further notice shall be given by the Paying Agent on the City's behalf as set out below, but no defect in said further notice nor any failure to give all or any portion of such further notice shall in any manner defeat the effectiveness of a call for redemption if official notice thereof is given as above prescribed.

(i) Each further notice of redemption given hereunder shall contain the information required above for an official notice of redemption plus (A) the CUSIP numbers of all Bonds being redeemed; (B) the date of issue of the Bonds as originally issued; and (C) any other descriptive information needed to identify accurately the Bonds being redeemed.

(ii) Each further notice of redemption shall be filed on the Electronic Municipal Market Access system for municipal securities disclosures ("EMMA") established and maintained by the MSRB (or any successor to EMMA established by the MSRB), at least one day before the mailing of notice to Registered Owners. If EMMA ceases to exist, then each further notice of redemption shall be sent by first class, registered or certified mail or overnight delivery, as determined by the Paying Agent, to one or more national information services that disseminate notices of redemption of obligations such as the Bonds.

(h) Each check or other transfer of funds issued for the payment of the Redemption Price of Bonds being redeemed shall bear or have enclosed therewith the CUSIP number of the Bonds being redeemed with the proceeds of such check or other transfer.

(i) The Paying Agent is also directed to comply with any mandatory standards then in effect for processing redemptions of municipal securities established by the SEC. Failure to comply with such standards shall not affect or invalidate the redemption of any Bond.

ARTICLE IV

SECURITY FOR AND PAYMENT OF BONDS

Section 401. Security for the Bonds.

(a) The Bonds are special obligations of the City payable as to both principal or Redemption Price of and interest on the Bonds solely from annual appropriations of funds by the City for such purpose to be deposited in the Debt Service Fund. The obligation of the City to make payments into the Debt Service Fund and any other obligations of the City to make payments under this Ordinance do not constitute a general obligation or indebtedness of the City for which the City is obligated to levy or pledge any form of taxation, or for which the City has levied or pledged any form of taxation and shall

not be construed to be a debt of the City in contravention of any applicable constitutional, statutory or charter limitation or requirement but in each Fiscal Year shall be payable solely from the amounts pledged or appropriated therefor (i) out of the income and revenues provided for such year plus (ii) any unencumbered balances for previous years. Subject to the preceding sentence, the obligations of the City to make payments hereunder and to perform and observe any other covenant and agreement contained herein shall be absolute and unconditional.

(b) The covenants and agreements of the City contained herein and in the Bonds shall be for the equal benefit, protection and security of the legal owners of any or all of the Bonds, all of which Bonds shall be of equal rank and without preference or priority of one Bond over any other Bond in the application of the funds to the payment of the principal or Redemption Price of and the interest on the Bonds, or otherwise, except as to the rate of interest and Stated Maturity as provided in this Ordinance.

Section 402. Covenant to Request Appropriations. The City Council hereby directs the Director of Finance or any other officer of the City at any time charged with the responsibility of formulating budget proposals to (a) include in each annual budget an appropriation of the amount necessary (after taking into account any moneys legally available for such purpose) to pay debt service on the Bonds in the next succeeding Fiscal Year, and (b) take such further action (or cause the same to be taken) as may be necessary or desirable to assure the availability of moneys appropriated to pay such debt service on the Bonds in the next succeeding Fiscal Year. This does not obligate the City Council to appropriate such funds.

ARTICLE V

ESTABLISHMENT OF FUNDS; DEPOSIT AND APPLICATION OF MONEYS

Section 501. Establishment of Funds. There have been or shall be established in the treasury of the City and shall be held and administered by the Director of Finance of the City the following separate funds:

(a) Debt Service Fund.

(b) Project Fund.

(c) Rebate Fund.

Section 502. Deposit of Bond Proceeds. The net proceeds received from the sale of the Bonds shall be deposited simultaneously with the delivery of the Bonds in the Project Fund.

Section 503. Application of Money in the Project Fund.

(a) Money in the Project Fund shall be used by the City solely for the purpose of paying costs of the Project and the costs and expenses of issuing the Bonds.

(b) The Director of Finance shall make withdrawals from the Project Fund only for the purpose of paying costs of the Project that are submitted pursuant to an express contract approved by the City Council or that have been expressly approved for payment by the City Council, or if the City Council has delegated the approval of Project costs to the Mayor, then for such costs of the Project as are set forth in a certificate signed by the Mayor. Nothing hereinbefore contained shall prevent the payment out of the

Project Fund of all costs and expenses incident to the issuance of the Bonds without such a certificate or approval.

(c) Upon completion of the purpose for which the Bonds have been issued, any surplus remaining in the Project Fund shall be transferred to and deposited in the Debt Service Fund.

Section 504. Application of Moneys in Debt Service Fund.

(a) All amounts paid and credited to the Debt Service Fund shall be expended and used by the City for the sole purpose of paying the principal or Redemption Price of and interest on the Bonds as and when the same become due and the usual and customary fees and expenses of the Paying Agent. The Director of Finance is authorized and directed to withdraw from the Debt Service Fund sums sufficient to pay principal or Redemption Price of and interest on the Bonds and the fees and expenses of the Paying Agent as and when the same become due, and to forward such sums to the Paying Agent in a manner which ensures that the Paying Agent will receive immediately available funds in such amounts on or before 11:00 a.m. of the Business Day when such principal or Redemption Price, interest and fees of the Paying Agent will become due. If, through the lapse of time or otherwise, the Registered Owners of Bonds are no longer entitled to enforce payment of the Bonds or the interest thereon, the Paying Agent shall return said funds to the City. All moneys deposited with the Paying Agent shall be deemed to be deposited in accordance with and subject to all of the provisions contained in this Ordinance and shall be held in trust by the Paying Agent for the benefit of the Registered Owners of the Bonds entitled to payment from such moneys.

(b) Any moneys or investments remaining in the Debt Service Fund after the retirement of the Bonds shall be transferred and paid into the general fund of the City.

Section 505. Deposits and Investment of Moneys.

(a) Moneys in each of the funds created by and referred to in this Ordinance shall be deposited in a bank or banks or other legally permitted financial institutions located in the State of Missouri that are members of the Federal Deposit Insurance Corporation. All such deposits shall be continuously and adequately secured by the financial institutions holding such deposits as provided by the laws of the State of Missouri. All moneys held in the funds created by this Ordinance shall be kept separate and apart from all other funds of the City so that there shall be no commingling of such funds with any other funds of the City.

(b) Moneys held in any fund referred to in this Ordinance may be invested by the Director of Finance in accordance with the investment policy of the City, as such policy may be amended from time to time, in accordance with this Ordinance and the Federal Tax Certificate, in Permitted Investments; provided, however, that no such investment shall be made for a period extending longer than to the date when the moneys invested may be needed for the purpose for which such fund was created. All earnings on any investments held in any fund shall accrue to and become a part of such fund.

Section 506. Nonpresentment of Bonds. If any Bond is not presented for payment when the principal thereof becomes due at Maturity, if funds sufficient to pay such Bond have been made available to the Paying Agent all liability of the City to the Registered Owner thereof for the payment of such Bond shall forthwith cease, determine and be completely discharged, and thereupon it shall be the duty of the Paying Agent to hold such funds, without liability for interest thereon, for the benefit of the Registered Owner of such Bond, who shall thereafter be restricted exclusively to such funds for any claim of whatever nature on his part under this Ordinance or on, or with respect to, said Bond. If any Bond is not presented for payment within one year following the date when such Bond becomes due at Maturity, the

Paying Agent shall repay without liability for interest thereon, to the City the funds theretofore held by it for payment of such Bond, and such Bond shall, subject to the defense of any applicable statute of limitation, thereafter be an unsecured obligation of the City, and the Registered Owner thereof shall be entitled to look only to the City for payment, and then only to the extent of the amount so repaid to it by the Paying Agent, and the City shall not be liable for any interest thereon and shall not be regarded as a trustee of such money.

Section 507. Payments Due on Saturdays, Sundays and Holidays. In any case where a Bond Payment Date is not a Business Day, then payment of the principal or Redemption Price of and interest on the Bonds need not be made on such Bond Payment Date but may be made on the next succeeding Business Day with the same force and effect as if made on such Bond Payment Date, and no interest shall accrue for the period after such Bond Payment Date.

Section 508. Application of Money in the Rebate Fund.

(a) There shall be deposited in the Rebate Fund such amounts as are required to be deposited therein pursuant to the Federal Tax Certificate. All money at any time deposited in the Rebate Fund shall be held in trust, to the extent required to pay arbitrage rebate, and neither the City nor the Registered Owner of any Bonds shall have any rights in or claim to such money. All amounts deposited into or on deposit in the Rebate Fund shall be governed by this Section and the Federal Tax Certificate.

(b) The City shall periodically determine the amount of arbitrage rebate due under Section 148(f) of the Code in accordance with the Federal Tax Certificate, and the City shall make payments to the United States of America at the times and in the amounts determined under the Federal Tax Certificate. Any money remaining in the Rebate Fund after redemption and payment of all of the Bonds and payment and satisfaction of any arbitrage rebate, or provision made therefor, shall be released to the City.

(c) Notwithstanding any other provision of this Ordinance, including in particular **Article VII** hereof, the obligation to pay arbitrage rebate and to comply with all other requirements of this Section and the Federal Tax Certificate shall survive the defeasance or payment in full of the Bonds.

ARTICLE VI

REMEDIES

Section 601. Remedies. The provisions of this Ordinance, including the covenants and agreements herein contained, shall constitute a contract between the City and the Registered Owners of the Bonds, and the Registered Owner or Owners of not less than 10% in principal amount of the Bonds at the time Outstanding shall have the right for the equal benefit and protection of all Registered Owners of Bonds similarly situated:

(a) by mandamus or other suit, action or proceedings at law or in equity to enforce the rights of such Registered Owner or Owners against the City and its officers, agents and employees, and to require and compel duties and obligations required by the provisions of this Ordinance or by the constitution and laws of the State of Missouri;

(b) by suit, action or other proceedings in equity or at law to require the City, its officers, agents and employees to account as if they were the trustees of an express trust; and

(c) by suit, action or other proceedings in equity or at law to enjoin any acts or things which may be unlawful or in violation of the rights of the Registered Owners of the Bonds.

Section 602. Limitation on Rights of Bondowners. The covenants and agreements of the City contained herein and in the Bonds shall be for the equal benefit, protection and security of the legal owners of any or all of the Bonds. All of the Bonds shall be of equal rank and without preference or priority of one Bond over any other Bond in the application of the funds herein pledged to the payment of the principal of and the interest on the Bonds, or otherwise, except as to rate of interest, or date of Maturity or right of prior redemption as provided in this Ordinance. No one or more Bondowners secured hereby shall have any right in any manner whatever by his or their action to affect, disturb or prejudice the security granted and provided for herein, or to enforce any right hereunder, except in the manner herein provided, and all proceedings at law or in equity shall be instituted, had and maintained for the equal benefit of all Registered Owners of such Outstanding Bonds.

Section 603. Remedies Cumulative. No remedy conferred herein upon the Bondowners is intended to be exclusive of any other remedy, but each such remedy shall be cumulative and in addition to every other remedy and may be exercised without exhausting and without regard to any other remedy conferred herein. No waiver of any default or breach of duty or contract by the Registered Owner of any Bond shall extend to or affect any subsequent default or breach of duty or contract or shall impair any rights or remedies consequent thereon. No delay or omission of any Bondowner to exercise any right or power accruing upon any default shall impair any such right or power or shall be construed to be a waiver of any such default or acquiescence therein. Every substantive right and every remedy conferred upon the Registered Owners of the Bonds by this Ordinance may be enforced and exercised from time to time and as often as may be deemed expedient. If any suit, action or proceedings taken by any Bondowner on account of any default or to enforce any right or exercise any remedy has been discontinued or abandoned for any reason, or has been determined adversely to such Bondowner, then, and in every such case, the City and the Registered Owners of the Bonds shall be restored to their former positions and rights hereunder, respectively, and all rights, remedies, powers and duties of the Bondowners shall continue as if no such suit, action or other proceedings had been brought or taken.

Section 604. No Acceleration. Notwithstanding anything herein to the contrary, the Bonds are not subject to acceleration upon the occurrence of an event of default hereunder.

Section 605. No Obligation to Levy Taxes. Nothing contained in this Ordinance shall be construed as imposing on the City any duty or obligation to levy any taxes either to meet any obligation incurred hereunder or to pay the principal of or interest on the Bonds.

Section 606. Exception for Continuing Disclosure. This **Article VI** shall not apply to **Section 806** hereof regarding the City's continuing disclosure obligations, and Bondowners or Beneficial Owners (as defined in the Continuing Disclosure Undertaking) of the Bonds shall have no remedies for enforcement of said obligations other than the remedies provided for in **Section 806** hereof and the City's Continuing Disclosure Undertaking.

ARTICLE VII

DEFEASANCE

Section 701. Defeasance. When any or all of the Bonds or scheduled interest payments thereon have been paid and discharged, then the requirements contained in this Ordinance and all other rights granted hereby shall terminate with respect to the Bonds or scheduled interest payments thereon so paid

and discharged. Bonds or scheduled interest payments thereon shall be deemed to have been paid and discharged within the meaning of this Ordinance if there has been deposited with the Paying Agent, or other commercial bank or trust company located in the State of Missouri and having full trust powers, at or prior to the Stated Maturity or Redemption Date of said Bonds or the interest payments thereon, in trust for and irrevocably appropriated thereto, moneys and Defeasance Obligations which, together with the interest to be earned on any such Defeasance Obligations, will be sufficient for the payment of the principal of and redemption premium, if any, on said Bonds and interest accrued to the Stated Maturity or Redemption Date, or if default in such payment has occurred on such date, then to the date of the tender of such payments; provided, however, that if any such Bonds are to be redeemed prior to their Stated Maturity, (i) the City has elected to redeem such Bonds, and (ii) either notice of such redemption has been given, or the City has given irrevocable instructions, or shall have provided for an escrow agent to give irrevocable instructions, to the Paying Agent to give such notice of redemption in compliance with **Section 302(a)** hereof. Any money and Defeasance Obligations that at any time shall be deposited with the Paying Agent or other commercial bank or trust company by or on behalf of the City, for the purpose of paying and discharging any of the Bonds, shall be and are hereby assigned, transferred and set over to the Paying Agent or other bank or trust company in trust for the respective Registered Owners of the Bonds, and such moneys shall be and are hereby irrevocably appropriated to the payment and discharge thereof. All money and Defeasance Obligations deposited with the Paying Agent or other bank or trust company shall be deemed to be deposited in accordance with and subject to all of the provisions of this Ordinance.

ARTICLE VIII

MISCELLANEOUS PROVISIONS

Section 801. Tax Covenants. The City covenants and agrees to comply with all provisions and requirements of the Federal Tax Certificate, which is hereby approved, with such changes therein as shall be approved by the Mayor and the Bond Compliance Officer (as defined therein), which officers are hereby authorized to execute the Federal Tax Certificate for and on behalf of the City, such officer's signature thereon being conclusive evidence of his or her approval thereof.

Section 802. Annual Audit.

(a) Annually, promptly after the end of the Fiscal Year, the City will cause an audit to be made of its funds and accounts for the preceding Fiscal Year by an independent certified public accountant or firm of independent certified public accountants.

(b) Within 30 days after the completion of each such audit, a copy thereof shall be filed in the office of the City Clerk. Such audits shall at all times during the usual business hours be open to the examination and inspection by any taxpayer, any Registered Owner of any of the Bonds, or by anyone acting for or on behalf of such taxpayer or Registered Owner.

Section 803. Insurance. The City will carry and maintain fire and extended coverage insurance, either commercial or self-insured, upon all of the properties that constitute a part of the Project insofar as the same are or will be of an insurable nature and are financed or refinanced with the proceeds of the Bonds. Such insurance shall be in an amount at least equal to the lesser of (a) the amount of the Bonds then Outstanding or (b) the replacement cost thereof. In the event of loss or damage, the City, with reasonable dispatch, will use the proceeds of such insurance to reconstruct and replace the property damaged or destroyed. If reconstruction or replacement is unnecessary, the City will deposit the proceeds of such insurance into the Debt Service Fund.

Section 804. Amendments.

(a) Notwithstanding the City's obligations under the Continuing Disclosure Undertaking, which may be modified as provided therein, the rights and duties of the City and the Bondowners, and the terms and provisions of the Bonds or of this Ordinance, may be amended or modified at any time in any respect by ordinance of the City with the written consent of the Registered Owners of not less than a majority in principal amount of the Bonds then Outstanding, such consent to be evidenced by an instrument or instruments executed by such Registered Owners and duly acknowledged or proved in the manner of a deed to be recorded, and such instrument or instruments shall be filed with the City Clerk, but no such modification or alteration shall:

(i) extend the maturity of any payment of principal or interest due upon any Bond;

(ii) alter the optional Redemption Date of any Bond;

(iii) effect a reduction in the amount which the City is required to pay as principal of or interest on any Bond;

(iv) permit preference or priority of any Bond over any other Bond; or

(v) reduce the percentage in principal amount of Bonds required for the written consent to any modification or alteration of the provisions of this Ordinance.

(b) Any provision of the Bonds or of this Ordinance may, however, be amended or modified by ordinance duly adopted by the City Council at any time in any legal respect with the written consent of the Registered Owners of all of the Bonds at the time Outstanding.

(c) Without notice to or the consent of any Bondowners, the City may amend or supplement this Ordinance for the purpose of curing any formal defect, omission, inconsistency or ambiguity therein or in connection with any other change therein which is not materially adverse to the interests of the Bondowners.

(d) Every amendment or modification of the provisions of the Bonds or of this Ordinance, to which the written consent of the Bondowners is given, as above provided, shall be expressed in an ordinance adopted by the City Council amending or supplementing the provisions of this Ordinance and shall be deemed to be a part of this Ordinance. A certified copy of every such amendatory or supplemental ordinance, if any, and a certified copy of this Ordinance shall always be kept on file in the office of the City Clerk, shall be made available for inspection by the Registered Owner of any Bond or a prospective purchaser or owner of any Bond authorized by this Ordinance, and upon payment of the reasonable cost of preparing the same, a certified copy of any such amendatory or supplemental ordinance or of this Ordinance will be sent by the City Clerk to any such Bondowner or prospective Bondowner.

(e) Any and all modifications made in the manner hereinabove provided shall not become effective until there has been filed with the City Clerk a copy of the ordinance of the City hereinabove provided for, duly certified, as well as proof of any required consent to such modification by the Registered Owners of the Bonds then Outstanding. It shall not be necessary to note on any of the Outstanding Bonds any reference to such amendment or modification.

(f) The City shall furnish to the Paying Agent a copy of any amendment to the Bonds or this Ordinance which affects the duties or obligations of the Paying Agent under this Ordinance.

Section 805. Notices, Consents and Other Instruments by Bondowners.

(a) Any notice, consent, request, direction, approval or other instrument to be signed and executed by the Bondowners may be in any number of concurrent writings of similar tenor and may be signed or executed by such Bondowners in person or by agent appointed in writing. Proof of the execution of any such instrument or of the writing appointing any such agent and of the ownership of Bonds (other than the assignment of the ownership of a Bond as provided for in the form of Bond set forth in **Exhibit A** attached hereto), if made in the following manner, shall be sufficient for any of the purposes of this Ordinance, and shall be conclusive in favor of the City and the Paying Agent with regard to any action taken, suffered or omitted under any such instrument, namely:

(i) The fact and date of the execution by any person of any such instrument may be proved by a certificate of any officer in any jurisdiction who by law has power to take acknowledgments within such jurisdiction that the person signing such instrument acknowledged before such officer the execution thereof, or by affidavit of any witness to such execution.

(ii) The fact of ownership of Bonds, the amount or amounts, numbers and other identification of Bonds, and the date of holding the same shall be proved by the Bond Register.

(b) In determining whether the Registered Owners of the requisite principal amount of Bonds Outstanding have given any request, demand, authorization, direction, notice, consent or waiver under this Ordinance, Bonds owned by the City shall be disregarded and deemed not to be Outstanding under this Ordinance, except that, in determining whether the Bondowners shall be protected in relying upon any such request, demand, authorization, direction, notice, consent or waiver, only Bonds which the Bondowners know to be so owned shall be so disregarded. Notwithstanding the foregoing, Bonds so owned which have been pledged in good faith shall not be disregarded as aforesaid if the pledgee establishes to the satisfaction of the Bondowners the pledgee's right so to act with respect to such Bonds and that the pledgee is not the City.

Section 806. Continuing Disclosure. The City hereby covenants and agrees that it will comply with and carry out all of the provisions of the Continuing Disclosure Undertaking as originally executed and as it may be amended from time to time in accordance with the terms thereof. The Mayor is hereby authorized to execute the Continuing Disclosure Undertaking, in substantially the form attached hereto as **Exhibit C**, to make the Bonds subject to the Continuing Disclosure Undertaking. Upon the City's failure to comply with the Continuing Disclosure Undertaking, any Bondowner may take such actions as may be necessary and appropriate, including seeking mandamus or specific performance by court order, to cause the City to comply with its obligations under this Section. In no event will a default under the Continuing Disclosure Undertaking be considered a default pursuant to this Ordinance.

Section 807. Electronic Transactions. The transaction described herein may be conducted and related documents may be sent, received or stored by electronic means. Copies, telecopies, facsimiles, electronic files and other reproductions of original executed documents shall be deemed to be authentic and valid counterparts of such original documents for all purposes, including the filing of any claim, action or suit in the appropriate court of law.

Section 808. Further Authority. The officers of the City, including the Mayor, Director of Finance, City Clerk and Deputy City Clerk, are hereby authorized and directed to execute all documents and take such actions as they may deem necessary or advisable in order to carry out and perform the purposes of this Ordinance and to make ministerial alterations, changes or additions in the foregoing agreements, statements, instruments and other documents herein approved, authorized and confirmed

which they may approve, and the execution or taking of such action shall be conclusive evidence of such necessity or advisability.

Section 809. Parties Interested Herein. Nothing in this Ordinance expressed or implied is intended or shall be construed to confer upon, or to give or grant to, any person or entity, other than the City, the Paying Agent and the Bondowners, any right, remedy or claim under or by reason of this Ordinance or any covenant, condition or stipulation hereof, and all covenants, stipulations, promises and agreements in this Ordinance contained by and on behalf of the City shall be for the sole and exclusive benefit of the City, the Paying Agent and the Bondowners.

Section 810. Severability. If any section or other part of this Ordinance, whether large or small, is for any reason held invalid, the invalidity thereof shall not affect the validity of the other provisions of this Ordinance.

Section 811. Governing Law. This Ordinance shall be governed exclusively by and construed in accordance with the applicable laws of the State of Missouri.

Section 812. Effective Date. This Ordinance shall be in full force and effect from and after its passage and approval.

[Remainder of Page Intentionally Left Blank]

PASSED AND APPROVED by the City Council of the City of Florissant, Missouri, this 28th day of November, 2016.

Adopted this 28th day of November, 2016.

_____
President of the Council
City of Florissant

Approved this 28th day of November, 2016.

_____
Mayor, City of Florissant

(SEAL)

ATTEST:

_____
City Clerk

First Reading: November 14, 2016

EXHIBIT A
TO ORDINANCE

(FORM OF BONDS)

EXCEPT AS OTHERWISE PROVIDED IN THE ORDINANCE (DESCRIBED HEREIN), THIS GLOBAL BOND MAY BE TRANSFERRED, IN WHOLE BUT NOT IN PART, ONLY TO ANOTHER NOMINEE OF THE SECURITIES DEPOSITORY (DESCRIBED HEREIN) OR TO A SUCCESSOR SECURITIES DEPOSITORY OR TO A NOMINEE OF A SUCCESSOR SECURITIES DEPOSITORY.

UNITED STATES OF AMERICA
STATE OF MISSOURI

Registered **Registered**
No. _____ **$_____**

CITY OF FLORISSANT, MISSOURI

SPECIAL OBLIGATION BOND
SERIES 2016

Interest Rate	Maturity Date	Dated Date	CUSIP Number
_____%	November 1, ____	December 13, 2016	_____

REGISTERED OWNER: CEDE & CO.

PRINCIPAL AMOUNT: _____ DOLLARS

THE CITY OF FLORISSANT, MISSOURI, a municipal corporation and constitutional charter city operating under a home rule form of government and political subdivision of the State of Missouri (the "City"), for value received, hereby acknowledges itself to be indebted and promises to pay to the registered owner shown above, or registered assigns, the principal amount shown above on the maturity date shown above unless called for redemption prior to said maturity date and to pay interest thereon at the interest rate per annum shown above (computed on the basis of a 360-day year of twelve 30-day months) from the Dated Date shown above or from the most recent interest payment date to which interest has been paid or duly provided for, payable semiannually on May 1 and November 1 in each year, beginning on May 1, 2017, until said principal amount has been paid.

The principal or Redemption Price of this Bond shall be paid at maturity or upon earlier redemption by check, electronic transfer or draft to the person in whose name this Bond is registered at the maturity date or Redemption Date thereof, upon presentation and surrender of this Bond at the principal payment office of BOKF, NA, St. Louis, Missouri (the "Paying Agent"), or such other office

designated by the Paying Agent. The interest payable on this Bond on any interest payment date shall be paid to the person in whose name this Bond is registered on the registration books maintained by the Paying Agent at the close of business on the Record Date for such interest, which shall be the 15th day (whether or not a business day) of the calendar month next preceding the interest payment date. Such interest shall be payable (a) by check or draft mailed by the Paying Agent to the address of such Registered Owner shown on the Bond Register or (b) by electronic transfer to such Registered Owner upon written notice signed by such Owner, given to the Paying Agent, not less than 15 days prior to the Record Date for such interest, containing the electronic transfer instructions including the bank, ABA routing number and account number to which such Registered Owner wishes to have such transfer directed and an acknowledgment that an electronic transfer fee may be applicable. The principal or Redemption Price of and interest on the Bonds shall be payable by check or draft in any coin or currency that, on the respective dates of payment thereof, is legal tender for the payment of public and private debts.

This Bond is one of an authorized series of bonds of the City designated "Special Obligation Bonds, Series 2016," aggregating the principal amount of $_____ (the "Bonds"), issued by the City for the purpose of providing funds to (a) pay the costs of the Project and (b) pay the costs of issuing the Bonds, under the authority of and in full compliance with the City's Charter and the Constitution and laws of the State of Missouri, and pursuant to an ordinance duly passed (the "Ordinance") and proceedings duly and legally had by the City Council of the City. *Capitalized terms used herein and not otherwise defined herein shall have the meanings assigned to such terms in the Ordinance.*

At the option of the City, the Bonds or portions thereof maturing on November 1, 2025 and thereafter may be called for redemption and payment prior to their Stated Maturity on November 1, 2024 and thereafter as a whole or in part at any time in such order of maturity determined by the City (Bonds of less than a full maturity to be selected in multiples of $5,000 in such equitable manner as the Paying Agent shall designate) at the redemption price of 100% of the principal amount thereof plus accrued interest thereon to the redemption date.

[The Bonds maturing on November 1, 20___ are subject to mandatory redemption and payment prior to maturity pursuant to the mandatory redemption requirements of the Ordinance on November 1, 20___ and each November 1 thereafter to maturity at a redemption price equal to 100% of the principal amount thereof plus accrued interest to the redemption date.]

Notice of redemption, unless waived, is to be given by the Paying Agent by mailing an official redemption notice by first class mail at least 30 days but not more than 60 days prior to the Redemption Date to the Purchaser and each Registered Owner of the Bond or Bonds to be redeemed at the address shown on the Bond Register maintained by the Paying Agent. Notice of redemption having been given as aforesaid, the Bonds or portions of Bonds to be redeemed shall, on the Redemption Date, become due and payable at the Redemption Price therein specified, and from and after such date (unless the City defaults in the payment of the Redemption Price) such Bonds or portions of Bonds shall cease to bear interest.

The Bonds shall be special obligations of the City payable as to both principal and interest solely from annual appropriations of funds by the City for such purpose. The obligation of the City to make payments into the Debt Service Fund and any other obligations of the City to make payments under the Ordinance do not constitute a general obligation or indebtedness of the City for which the City is obligated to levy or pledge any form of taxation, or for which the City has levied or pledged any form of taxation and shall not be construed to be a debt of the City in contravention of any applicable constitutional, statutory or charter limitation or requirement but in each Fiscal Year shall be payable solely from the amounts pledged or appropriated therefor (a) out of the income and revenues provided for such year plus (b) any unencumbered balances for previous years.

The Bonds are issuable in the form of fully-registered Bonds in the denominations of $5,000 or any integral multiple thereof.

The Bonds are being issued by means of a book-entry system with no physical distribution of bond certificates to be made except as provided in the Ordinance. One Bond certificate with respect to each date on which the Bonds are stated to mature, registered in the nominee name of the Securities Depository, is being issued and required to be delivered to and immobilized with the Securities Depository or with the Paying Agent as the Securities Depository's FAST Agent. The book-entry system will evidence positions held in the Bonds by the Securities Depository's participants, beneficial ownership of the Bonds in authorized denominations being evidenced in the records of such participants. Transfers of ownership shall be effected on the records of the Securities Depository and its participants. The Paying Agent and the City will recognize the Securities Depository nominee, while the Registered Owner of this Bond, as the owner of this Bond for all purposes, including (a) payments of principal or Redemption Price of and interest on, this Bond, (b) notices and (c) voting. Transfers of principal or Redemption Price and interest payments to participants of the Securities Depository will be the responsibility of such participants and other nominees of such beneficial owners. The Paying Agent and the City will not be responsible or liable for such transfers of payments or for maintaining, supervising or reviewing the records maintained by the Securities Depository, the Securities Depository nominee, its participants or persons acting through such participants. While the Securities Depository nominee is the owner of this Bond, notwithstanding the provision hereinabove contained, payments of principal of and interest on this Bond shall be made in accordance with existing arrangements between the Paying Agent, the City and the Securities Depository.

EXCEPT AS OTHERWISE PROVIDED IN THE ORDINANCE, THIS GLOBAL BOND MAY BE TRANSFERRED, IN WHOLE BUT NOT IN PART, ONLY TO ANOTHER NOMINEE OF THE SECURITIES DEPOSITORY OR TO A SUCCESSOR SECURITIES DEPOSITORY OR TO A NOMINEE OF A SUCCESSOR SECURITIES DEPOSITORY.

This Bond may be transferred or exchanged, as provided in the Ordinance, only on the Bond Register kept for that purpose at the principal payment office of the Paying Agent, or such other office designated by the Paying Agent, upon surrender of this Bond together with a written instrument of transfer or authorization for exchange satisfactory to the Paying Agent duly executed by the Registered Owner or the Registered Owner's duly authorized agent, and thereupon a new Bond or Bonds in any authorized denomination of the same maturity and in the same aggregate principal amount shall be issued to the transferee in exchange therefor as provided in the Ordinance and upon payment of the charges therein prescribed. The City and the Paying Agent may deem and treat the Person in whose name this Bond is registered on the Bond Register as the absolute owner hereof for the purpose of receiving payment of, or on account of, the principal or Redemption Price hereof and interest due hereon and for all other purposes and neither the City nor the Paying Agent shall be effected by any notice to the contrary.

This Bond shall not be valid or become obligatory for any purpose or be entitled to any security or benefit under the Ordinance until the Certificate of Authentication hereon has been executed by the Paying Agent.

IT IS HEREBY DECLARED AND CERTIFIED that all acts, conditions and things required to be done and to exist precedent to and in the issuance of the Bonds have been done and performed and do exist in due and regular form and manner as required by the constitution and laws of the State of Missouri.

IN WITNESS WHEREOF, the **CITY OF FLORISSANT, MISSOURI**, has caused this Bond to be executed by the manual or facsimile signature of its Mayor and attested by the manual or facsimile signature of its City Clerk and its official seal to be affixed or imprinted hereon.

CERTIFICATE OF AUTHENTICATION

This Bond is one of the Bonds of the issue described in the within-mentioned Ordinance.

Registration Date: _____

BOKF, NA,
Paying Agent

By _____
Authorized Signatory

CITY OF FLORISSANT, MISSOURI

By: _____
Mayor

(Seal)

ATTEST:

_____
City Clerk

ASSIGNMENT

FOR VALUE RECEIVED, the undersigned hereby sells, assigns and transfers unto

_____

Print or Type Name, Address and Social Security Number
or other Taxpayer Identification Number of Transferee

the within Bond and all rights thereunder, and hereby irrevocably constitutes and appoints _____ agent to transfer the within Bond on the books kept by the Paying Agent for the registration thereof, with full power of substitution in the premises.

Dated: _____

_____

NOTICE: The signature to this assignment must correspond with the name of the Registered Owner as it appears upon the face of the within Bond in every particular.

Signature Guaranteed By:

_____

(Name of Eligible Guarantor Institution as defined by SEC Rule 17 Ad-15 (17 CFR 240.17 Ad-15))

By: _____
Title: _____

EXHIBIT B
TO ORDINANCE

PRELIMINARY OFFICIAL STATEMENT

[On file in the office of the City Clerk]

EXHIBIT C
TO ORDINANCE

CONTINUING DISCLOSURE UNDERTAKING

[On file in the office of the City Clerk]

EXHIBIT D
TO ORDINANCE

TERMS OF BONDS

1. Aggregate Principal Amount: Not to exceed $9,500,000.

2. Purchase Price: No less than 98% or more than 110% of the original principal amount of the Bonds.

3. Final Maturity: The Bonds shall not mature later than November 1, 2031.

4. True Interest Cost: Not to exceed 3.00%. "True Interest Cost" means the interest rate necessary to discount the debt service payments from the payment dates to the delivery date of the Bonds to an amount equal to the purchase price paid to the City. True Interest Cost is expressed as an annual percentage rate, and present value is computed on a semiannual basis using a 30/360 day-count convention.

5. Weighted Average Maturity: Not to exceed 9.5 years.

* * *

EXHIBIT E
TO ORDINANCE

FINAL TERMS CERTIFICATE

The undersigned, on behalf of the City of Florissant, Missouri (the "City"), in connection with the issuance of the City's Special Obligation Bonds, Series 2016 (the "Bonds"), certify pursuant to **Section 210** of the Ordinance authorizing the issuance of the Bonds adopted by the City Council on November 28, 2016 (the "Ordinance"), as follows:

1. Original Principal Amount. The Bonds are issued in the original principal amount of $_____.

2. Purchase Price. The purchase price of the Bonds, which is _____% of the original principal amount of the Bonds, is calculated as follows:

Original Principal Amount	$
Plus: Net Original Issue Premium	
Less: Underwriter's Discount	_____
Total Purchase Price	$_____

3. Final Maturity of the Bonds. The final maturity of the Bonds is November 1, 20___.

4. True Interest Cost. The True Interest Cost of the Bonds, determined in accordance with **Exhibit D** to the Ordinance, is _____%.

5. Weighted Average Maturity. The weighted average maturity of the Bonds is _____ years.

6. Maturity Schedule. The Bonds will mature on the dates and in the amounts and bear interest at the rates as follows:

Stated Maturity (November 1)	Principal Amount	Annual Rate of Interest	Stated Maturity (November 1)	Principal Amount	Annual Rate of Interest
2017	$	%	2025	$	%
2018			2026		
2019			2027		
2020			2028		
2021			2029		
2022			2030		
2023			2031		
2024					

*Term Bonds

7. Mandatory Sinking Fund Redemption. The Term Bonds identified in paragraph 6 are subject to mandatory sinking fund redemption on the dates and in the amounts as follows:

Stated Maturity (November 1)	Principal Amount
20___	$
20___+	

_____
+Final Maturity

8. Purchaser. The original purchaser of the Bonds is _____.

The terms set forth in this Certificate of Final Terms are within the limitations of **Exhibit D** to the Ordinance.

Delivered this ____ day of _____, 2016.

CITY OF FLORISSANT, MISSOURI

By: _____
Mayor

(SEAL)

ATTEST:

_____
City Clerk

CERTIFICATE

I, the undersigned, hereby certify that the above and foregoing is a true and correct copy of the Ordinance of the City of Florissant, Missouri, adopted by the City Council on November 28, 2016, authorizing the issuance of Special Obligation Bonds, Series 2016, as the same appears of record in my office, and that said Ordinance has not been modified, amended or repealed and is in full force and effect as of this date.

DATED: December 13, 2016.

(Seal)

_____

City Clerk of the City of
Florissant, Missouri

CONTINUING DISCLOSURE UNDERTAKING

Dated as of December 1, 2016

By the

CITY OF FLORISSANT, MISSOURI

$8,835,000*
Special Obligation Bonds
Series 2016

CONTINUING DISCLOSURE UNDERTAKING

This **CONTINUING DISCLOSURE UNDERTAKING** dated as of December 1, 2016 (this **"Continuing Disclosure Undertaking"**), is executed and delivered by the **CITY OF FLORISSANT, MISSOURI** (the **"City"**).

RECITALS

1. This Continuing Disclosure Undertaking is executed and delivered by the City in connection with the issuance and delivery of $8,835,000* aggregate principal amount of Special Obligation Bonds, Series 2016 (the **"Bonds"**), pursuant to an ordinance adopted by the City Council on November 28, 2016 (the **"Ordinance"**).

2. The City is entering into this Continuing Disclosure Undertaking for the benefit of the Beneficial Owners (defined herein) of the Bonds and in order to assist the Participating Underwriter (defined herein) in complying with Rule 15c2-12 of the Securities and Exchange Commission (**"Rule"**). The City is the only **"obligated person"** with responsibility for continuing disclosure hereunder.

In consideration of the covenants and agreements herein, the City covenants and agrees as follows:

Section 1. Definitions. In addition to the definitions set forth in the Ordinance, which apply to any capitalized term used in this Continuing Disclosure Undertaking unless otherwise defined in this Section, the following capitalized terms have the following meanings:

"Annual Report" means any Annual Report filed by the City pursuant to, and as described in, **Section 2** hereof.

"Beneficial Owner" means any registered owner of any Bonds and any person which (a) has the power, directly or indirectly, to vote or consent with respect to, or to dispose of ownership of, any Bonds (including persons holding Bonds through nominees, depositories or other intermediaries), or (b) is treated as the owner of any Bonds for federal income tax purposes.

"EMMA" means the Electronic Municipal Market Access system for municipal securities disclosures established and maintained by the MSRB, which can be accessed at www.emma.msrb.org.

"Material Events" means any of the events listed in **Section 3** hereof.

"MSRB" means the Municipal Securities Rulemaking Board, or any successor repository designated as such by the Securities and Exchange Commission in accordance with the Rule.

"Participating Underwriter" means any of the original underwriter(s) of the Bonds required to comply with the Rule in connection with the offering of the Bonds.

"Rule" means Rule 15c2-12(b)(5) adopted by the Securities and Exchange Commission under the Securities Exchange Act of 1934, as the same may be amended from time to time.

Section 2. Provision of Annual Reports.

(a) The City shall not later than **180** days after the end of the City's fiscal year, commencing with the fiscal year ending November 30, 2016, provide to the MSRB, through EMMA, the following financial information and operating data (the **"Annual Report"**):

(1) The audited financial statements of the City for the prior fiscal year. If audited financial statements are not available by the time the Annual Report is required to be filed pursuant to this Section, the Annual Report shall contain unaudited financial statements in a format similar to the financial statements contained in the final Official Statement relating to the Bonds, and the audited financial statements shall be filed in the same manner as the Annual Report promptly after they become available.

(2) Updates as of the end of the fiscal year of certain financial information and operating data contained in the final Official Statement for the Bonds, as described in **Exhibit A**, in substantially the same format contained in the final Official Statement.

Any or all of the items listed above may be included by specific reference to other documents, including official statements of debt issues with respect to which the City is an **"obligated person"** (as defined by the Rule), which have been filed with the MSRB and are available through EMMA or the Securities and Exchange Commission. If the document included by reference is a final official statement, it must be available from the MSRB on EMMA. The City will clearly identify each such other document so included by reference.

In each case, the Annual Report may be submitted as a single document or as separate documents comprising a package, and may cross-reference other information as provided in this Section; provided that the audited financial statements of the City may be submitted separately from the balance of the Annual Report and later than the date required above for the filing of the Annual Report if they are not available by that date. If the City's fiscal year changes, it will give notice of such change in the same manner as for a Material Event under **Section 3** hereof.

(b) In addition to the foregoing requirements of this Section, the City agrees to provide copies of the most recent Annual Report to any requesting Beneficial Owner or prospective Beneficial Owner, but only after the same have been filed with the MSRB.

Section 3. Reporting of Material Events. Not later than 10 business days after the occurrence of any of the following events, the City shall give, or cause to be given to the MSRB, through EMMA, notice of the occurrence of any of the following events with respect to the Bonds (**"Material Events"**):

(1) principal and interest payment delinquencies;
(2) non-payment related defaults, if material;
(3) unscheduled draws on debt service reserves reflecting financial difficulties;
(4) unscheduled draws on credit enhancements reflecting financial difficulties;
(5) substitution of credit or liquidity providers, or their failure to perform;

(6) adverse tax opinions; the issuance by the Internal Revenue Service of proposed or final determinations of taxability, Notices of Proposed Issue (IRS Form 5701-TEB) or other material notices or determinations with respect to the tax status of the Bonds, or other material events affecting the tax status of the Bonds;
(7) modifications to rights of bondholders, if material;
(8) bond calls, if material, and tender offers;
(9) defeasances;
(10) release, substitution or sale of property securing repayment of the Bonds, if material;
(11) rating changes;
(12) bankruptcy, insolvency, receivership or similar event of the City;
(13) the consummation of a merger, consolidation, or acquisition involving the City or the sale of all or substantially all of the assets of the City, other than in the ordinary course of business, the entry into a definitive agreement to undertake such an action or the termination of a definitive agreement relating to any such actions, other than pursuant to its terms, if material; and
(14) appointment of a successor or additional trustee or the change of name of the Paying Agent, if material.

If the City has not submitted the Annual Report or any required portion thereof to the MSRB by the date required in **Section 2(a)** hereof, the City will send a notice to the MSRB of the failure of the City to file on a timely basis the Annual Report, which notice will be given by the City in accordance with this **Section 3**.

Section 4. Termination of Reporting Obligation. The City's obligations under this Continuing Disclosure Undertaking shall terminate upon the legal defeasance, redemption or payment in full of all of the Bonds. If the City's obligations under this Continuing Disclosure Undertaking are assumed in full by some other entity, such person shall be responsible for compliance with this Continuing Disclosure Undertaking in the same manner as if it were the City, and the City shall have no further responsibility hereunder. If such termination or substitution occurs prior to the final maturity of the Bonds, the City shall give notice of such termination or substitution in the same manner as for a Material Event under **Section 3** hereof.

Section 5. Dissemination Agents. The City may, from time to time, appoint or engage a dissemination agent to assist it in carrying out its obligations under this Continuing Disclosure Undertaking, and may discharge any such agent, with or without appointing a successor dissemination agent. The dissemination agent may resign as dissemination agent hereunder at any time upon 30 days prior written notice to the City. The dissemination agent will not be responsible in any manner for the content of any notice or report (including without limitation the Annual Report) prepared by the City pursuant to this Continuing Disclosure Undertaking.

Section 6. Amendment; Waiver. Notwithstanding any other provision of this Continuing Disclosure Undertaking, the City may amend this Continuing Disclosure Undertaking and any provision of this Continuing Disclosure Undertaking may be waived, provided that Bond Counsel or other counsel experienced in federal securities law matters provides the City with its written opinion that the undertaking of the City contained herein, as so amended or after giving effect to such waiver, is in compliance with the Rule and all current amendments thereto and interpretations thereof that are applicable to this Continuing Disclosure Undertaking.

In the event of any amendment or waiver of a provision of this Continuing Disclosure Undertaking, the City shall describe such amendment or waiver in the next Annual Report, and shall include, as applicable, a narrative explanation of the reason for the amendment or waiver and its impact on the type (or, in the case of a change of accounting principles, on the presentation) of financial information or operating data being presented by the City. In addition, if the amendment relates to the accounting principles to be followed in preparing financial statements, (1) notice of such change shall be given in the same manner as for a Material Event under **Section 3**, and (2) the Annual Report for the year in which the change is made should present a comparison (in narrative form and also, if feasible, in quantitative form) between the financial statements as prepared on the basis of the new accounting principles and those prepared on the basis of the former accounting principles.

Section 7. Additional Information. Nothing in this Continuing Disclosure Undertaking will be deemed to prevent the City from disseminating any other information, using the means of dissemination set forth in this Continuing Disclosure Undertaking or any other means of communication, or including any other information in any Annual Report or notice of occurrence of a Material Event, in addition to that which is required by this Continuing Disclosure Undertaking. If the City chooses to include any information in any Annual Report or notice of occurrence of a Material Event, in addition to that which is specifically required by this Continuing Disclosure Undertaking, the City will have no obligation under this Continuing Disclosure Undertaking to update such information or include it in any future Annual Report or notice of occurrence of a Material Event.

Section 8. Default. If the City fails to comply with any provision of this Continuing Disclosure Undertaking, any Participating Underwriter or any Beneficial Owner of the Bonds may take such actions as may be necessary and appropriate, including seeking mandamus or specific performance by court order, to cause the City to comply with its obligations under this Continuing Disclosure Undertaking. A default under this Continuing Disclosure Undertaking will not be deemed an event of default under the Ordinance or the Bonds and the sole remedy under this Continuing Disclosure Undertaking in the event of any failure of the City to comply with this Continuing Disclosure Undertaking shall be an action to compel performance.

Section 9. Beneficiaries. This Continuing Disclosure Undertaking will inure solely to the benefit of the City, the Participating Underwriter, and Beneficial Owners from time to time of the Bonds, and shall create no rights in any other person or entity.

Section 10. Severability. If any provision in this Continuing Disclosure Undertaking, the Ordinance or the Bonds shall be invalid, illegal or unenforceable, the validity, legality and enforceability of the remaining provisions shall not in any way be affected or impaired thereby.

Section 11. Electronic Transactions. The arrangement described herein may be conducted and related documents may be stored by electronic means. Copies, telecopies, facsimiles, electronic files and other reproductions of original documents shall be deemed to be authentic and valid counterparts of such original documents for all purposes, including the filing of any claim, action or suit in the appropriate court of law.

Section 12. Governing Law. This Continuing Disclosure Undertaking shall be governed by and construed in accordance with the laws of the State of Missouri.

IN WITNESS WHEREOF, the City has caused this Continuing Disclosure Undertaking to be executed as of the 13th day of December, 2016.

CITY OF FLORISSANT, MISSOURI

By: _____
Name: Thomas P. Schneider
Title: Mayor

[Continuing Disclosure Undertaking]

EXHIBIT A

FINANCIAL INFORMATION AND OPERATING DATA TO BE INCLUDED IN ANNUAL REPORT

Updates of tables found under the following sections of Appendix A to the final Official Statement:

1. **"FINANCIAL INFORMATION CONCERNING THE CITY - The General Fund"** and **"- Sources of Revenue"**

2. **"DEBT STRUCTURE OF THE CITY - Debt Ratios and Related Information"** (except overlapping debt information)

3. **"PROPERTY TAX INFORMATION - Property Valuations"**

INTRODUCED BY COUNCIL AS A WHOLE

NOVEMBER 14, 2016

BILL NO. 9241 ORDINANCE NO.

AN ORDINANCE REPEALING ORDINANCE NO. 8099 AND AUTHORIZING THE MAYOR OF THE CITY OF FLORISSANT TO ENTER INTO A CONTRACT WITH THE LAW FIRM OF LEWIS, RICE REPRESENTED BY JOHN M. HESSEL FOR LEGAL SERVICES FOR THE CITY OF FLORISSANT COMMENCING ON DECEMBER 1, 2016 AND ENDING ON NOVEMBER 30, 2018.

BE IT ORDAINED BY THE COUNCIL OF THE CITY OF FLORISSANT, ST. LOUIS COUNTY, MISSOURI, AS FOLLOWS:

Section 1: The Mayor of the City of Florissant is hereby authorized to enter into an agreement with the Law Firm of LEWIS, RICE & FINGERSH represented by John M. Hessel for legal services to be rendered to the City of Florissant commencing on the 1st day of December, 2016 and ending on the 30th day of November, 2018, only in accordance with the contract attached hereto and made a part hereof.

Section 5: This ordinance shall become in force and effect as of December 1, 2016.

Adopted this ____ day of _____, 2016.

_____
Jackie Pagano
Council President

Approved this ____ day of _____, 2016.

_____
Thomas P. Schneider
Mayor, City of Florissant

ATTEST:

_____
Karen Goodwin, MMC/MRCC
City Clerk

EMPLOYMENT AGREEMENT

John M. Hessel of the law firm of **Lewis, Rice, & Fingersh** proposes the following terms and conditions for legal services to the City of Florissant ("City") for the fiscal years commencing on December 1, 2016 and ending on November 30, 2018:

I. Retainer Services:

A. For the fee of $2,990 per month, office hours will be maintained at City Hall every 1st and 3rd Tuesday between the hours of 1:30 p.m. and 5:30 p.m. or at such comparable days and times as may be directed by the City. The following legal services shall be included in the retainer:

1. Drafting and reviewing all ordinances and resolutions as may be required for the regular operation of the city government during "office hours".

2. Render informal legal opinions as may be required by the Mayor, members of the City Council, department heads, and the employees authorized to request such opinions during the "office hours".

3. Respond to citizen inquiries.

4. Promptly notify the Mayor and City Council of any and all litigation filed against the City, or against the City Council, or any City Commission or Committee, or against any City Official or Employee sued in his or her official capacity or as an employee of the City, and shall thereafter consult with and advise the Mayor and City Council regarding the nature of such litigation, and shall advise the City Council and Mayor of the status of such litigation. Unless and until special counsel is authorized and retained for such litigation, the City Attorney shall represent the City and its interest in such litigation.

B. Legal services for attendance and representation of the City at the regular City Council meetings shall be rendered to the City for a fee of $725.00 per meeting.

1. Attendance and representation at the regular City Council meetings.

II. General Miscellaneous Services:

The following services shall be rendered to the City at the rate of $275.00 per hour:

A. Attendance at meetings not included in the retainer services.

B. Upon authorization from the Mayor or any member of the City Council:

1. Research and preparation of written memorandums or written opinions that exceed the "office hours".

2. Draft new or extensive ordinances not in the ordinary course of the City's business.

3. Negotiations with other parties with respect to contracts, including parties with respect to contracts including purchase or sale of property and drafting of contracts.

III. General Litigation:

Services required for litigation matters pending in state or federal courts, shall be rendered at the rate of $275.00 per hour. This rate will not apply to antitrust or annexation litigation (either as plaintiff or defendant) or to defense of civil rights claims. The fees for litigation not included herein shall be agreed to prior to the time such services shall be rendered.

IV. Labor/Annexation/Bonds:

Services requiring labor, annexation or bond specialists shall be rendered at the rate of $275.00 per hour.

V. Out-of-pocket expense:

In addition to the fees set forth above, Lewis, Rice, & Fingersh shall be reimbursed for all direct out-of-pocket expenditures incurred in the rendering of such services as follows:

A. Travel expenses including transportation, food, and lodging while on City business away from the St. Louis metropolitan area and upon approval of such travel in advance by the appropriate City official.

B. Special courier or messenger service when required by the City.

C. Photocopy or document reproduction costs when required by the City for use in legal proceedings and out-of-pocket litigation costs such as depositions.

D. Long distance telephone expenditures.

VI. Other services:

It is estimated that this proposal will cover all required legal services. In the event there is a need for services not described, or specifically excluded, the fees for such services shall be reviewed with the City prior to such undertaking.

VII. Overhead and related costs:

No general overhead costs incurred by the firm of Lewis, Rice, & Fingersh in rendering such services shall be billed to the City. Further, the City shall not provide any insurance or pension benefits for any attorney at Lewis, Rice, & Fingersh.

Approved by Ordinance No. _____ passed and approved on the____ day of November, 2016.

LEWIS, RICE & FINGERSH

_____
John M. Hessel

CITY OF FLORISSANT

By:_____
Thomas P. Schneider
Mayor, City of Florissant

ATTEST:

_____
Karen Goodwin, City Clerk, MMCA/MRCC

TRANSFER OF SPECIAL PERMIT

AUTHORIZED BY ORDINANCE NUMBER (S) 8196

FROM Yang Ent. dba #1 Chinese Restaurant

TO Dong No. #1 China

FOR operation of a Restaurant

ADDRESS 2738 N. Hwy 67

Ward 9 Zoning ——— Date Filed 4/22/16 Accepted By [illegible]

TRANSFER OF SPECIAL USE PERMIT PETITION

TO THE CITY COUNCIL OF THE CITY OF FLORISSANT:

1. Comes now SHENG QIU DONG and states to the City Council that he (she) (they) has (have) the following legal interest in the property located at 2738 N. Hwy 67 in the City of Florissant, Missouri. Legal interest: (X) Lease or ( ) Simple Title
   (Attach signed copy of lease or deed)

2. The petitioner(s) further state that he (she) (they) has (have) not made any arrangement to pay any commission, gratuity, or consideration, directly or indirectly to any official, employee, or appointee of the City of Florissant, with respect to this petition.

3. The applicant will operate the business in the same manner and under the same conditions as set out in the original ordinance granting the special permit or any amendments thereto, except for any proposed change in sign face of an authorized sign.

PETITIONER SIGNATURE SHENG QIU DONG [signature]
Individual's Name

FOR: Dong No. 1 China
Company, Corporation, Partnership

11/22/16 Sent to Council Hemel for mayor

4. I (we) hereby certify that (indicate **one only**):

(X) I (we) have a legal interest in the above described property.
( ) I am (we are) the duly appointed agent (s) of the petitioner, and that all information given is true and a statement of fact.

X SIGNATURE SHENG QIU DONG

ADDRESS 2565 Sorrell Drive Florissant, MO 63033

Telephone No. (314)933-6813 Email address _____

I (we) the petitioner(s) do hereby appoint _____ as my (our) duly authorized agent to represent me (us) in regard to this petition.

X _____
PETITIONER SIGNATURE

Note: Petitioner or his/her authorized agent will be the only person(s) permitted to make the presentation to the City Council.

5. Acknowledgement and consent of owner to Transfer Special Permit Petition.

_____
SIGNATURE OF OWNER

STATE OF MISSOURI

Jason Kander
Secretary of State

CERTIFICATE OF ORGANIZATION

WHEREAS,

Dong No. 1 China LLC
LC001514667

filed its Articles of Organization with this office on the 16th day of November, 2016, and that filing was found to conform to the Missouri Limited Liability Company Act.

NOW, THEREFORE, I, Jason Kander, Secretary of State of the State of Missouri, do by virtue of the authority vested in me by law, do certify and declare that on the 16th day of November, 2016, the above entity is a Limited Liability Company, organized in this state and entitled to any rights granted to Limited Liability Companies.

IN TESTIMONY WHEREOF, I hereunto set my hand and cause to be affixed the GREAT SEAL of the State of Missouri. Done at the City of Jefferson, this 16th day of November, 2016.

JASON KANDER
Secretary of State

LEASE ASSIGNMENT AND CONSENT BY LANDLORD AGREEMENT

THIS LEASE ASSIGNMENT AND CONSENT BY LANDLORD AGREEMENT ("**Assignment Consent Agreement**"), made and entered into this 19th day of November, 2016, by and among, **Kia Lee Lim and Bao Hong Fan, jointly and severally**, ("**Assignors**"); **Sheng Qui Dong**, ("**Assignee**"); and Bridle Development Corp., a Missouri corporation ("**Landlord**");

WITNESSETH:

WHEREAS, Landlord and Assignor (as Tenant) are parties to that certain Shopping Center Lease, dated December 19, 2002, a First Amendment To Lease dated February 16, 2006 and a Second Amendment To Lease dated April 27, 2010 and a Third Amendment To Lease dated November 12, 2010 and a Lease Assignment and Consent By Landlord Agreement dated December 31, 2015 ("**Lease**") for certain space known and numbered as 2738 N. Highway 67, Florissant, Missouri, containing approximately 1,200 rentable square feet of space ("**Premises**"), and located in Surrey Plaza II Shopping Center ("**Property**"); and

WHEREAS, pursuant to the Third Amendment to Lease dated November 12, 2014, the parties agreed that the monthly minimum rent is $1,400.00 Dollars and shall increase on July 1, 2019 to $1,500.00 Dollars. Further the parties agree that the current lease term shall expire on June 30, 2021.

WHEREAS, Assignor desires to transfer its interest in said Lease to Assignee; and whereas, Assignee desires to of assume all of Assignor's interests in said Lease;

NOW THEREFORE, for and in consideration of the foregoing, and the mutual covenants set forth below, and One Dollar and other valuable consideration paid by each party herein to the other, it is agreed as follows:

1. Assignor and Assignee hereby represent and warrant to Landlord that Assignor is transferring to Assignee all or substantially all of the assets in the business operated at the Premises, among which is Assignor's right, title and interest in and to said Lease. Assignor and Assignee further represent and warrant to Landlord that the nature and character of Assignee's business is substantially the same as that of Assignor, and that the use of the Premises and Property by Assignee shall remain substantially unchanged.

2. Assignor hereby assigns and transfers to Assignee all of Assignor's rights, privileges, duties, obligations, liabilities, responsibilities and interest as Tenant in and to said Lease.

3. Assignee hereby accepts and agrees to assume all of Assignor's rights, privileges, duties, obligations, liabilities, responsibilities and interests as Tenant under said Lease, including Assignor's obligations to pay any and all past, current and future rents and other charges when due in accordance with the Lease marked Exhibit "A" attached hereto and made a part hereof.

4. Any notices that are required to be given shall be in writing, delivered by United States registered or certified mail; and such notices shall be sent postage prepaid, addressed to the parties hereto at their respective addresses below:

WHEREFORE, the parties hereto have executed this Lease Assignment and Consent by Landlord Agreement the day and year first above written.

ASSIGNEE:

By: SHENG QIU DONG

Sheng Qui Dong

ASSIGNOR:

By: Kia Lee - Lim

Kia Lee Lim

ASSIGNOR:

By: Bao Hong Fan

Bao Hong Fan

State of Missouri)
)
County of St. Louis)

On this day, personally appeared before me **Kia Lee Lim**, to me known to be the person (s) described in and who executed the within and foregoing instrument, and acknowledged that he/she signed the same as his/her voluntary act and deed, for the uses and purposes therein mentioned.

Witness my hand and official seal hereto affixed this 19th day of Nov, 2016.

Notary Public

My commission expires:

March 15, 2017

YONG GAO
Notary Public - Notary Seal
State of Missouri
Commissioned for St. Louis County
My Commission Expires: March 15, 2017
Commission Number: 13406073

3178117.1

State of Missouri)
)
County of St. Louis)

On this day, personally appeared before me **Bao Hong Fan**, to me known to be the person (s) described in and who executed the within and foregoing instrument, and acknowledged that he/she signed the same as his/her voluntary act and deed, for the uses and purposes therein mentioned.

Witness my hand and official seal hereto affixed this 19th day of Nov, 2016.

Notary Public

My commission expires:
March 15, 2017

YONG GAO
Notary Public - Notary Seal
State of Missouri
Commissioned for St. Louis County
My Commission Expires: March 15, 2017
Commission Number: 13406073

State of Missouri)
)
County of St. Louis)

On this day, personally appeared before me **Sheng Qiu Dong**, to me known to be the person (s) described in and who executed the within and foregoing instrument, and acknowledged that he/she signed the same as his/her voluntary act and deed, for the uses and purposes therein mentioned.

Witness my hand and official seal hereto affixed this 19th day of Nov, 2016.

Notary Public

My commission expires:
March 15, 2017

YONG GAO
Notary Public - Notary Seal
State of Missouri
Commissioned for St. Louis County
My Commission Expires: March 15, 2017
Commission Number: 13406073

For and in consideration of the foregoing covenants of Assignee and Assignor, and on the condition that all of the representations and warranties herein made by Assignor and Assignee are true and correct and may be enforced by Landlord, and on the further condition that Assignee performs all obligations of the Tenant under said Lease including the payment of all past, current and future rent and other charges when due, Landlord hereby consents to this Assignment Consent Assignment. Landlord shall release Assignor from its obligations under the said Lease after the Landlord's execution of this Assignment Consent Agreement.

LANDLORD:
BRIDLE DEVELOPMENT CORP.

By:_____

Thomas V. Lane

President

CITY OF FLORISSANT

Honorable Thomas P. Schneider, Mayor

TRANSFER OF SPECIAL USE PERMIT

The undersigned hereby acknowledges receipt of a copy of Ordinance Number 8196 which authorized a Special Permit:

TO: Yang Ent. dba #1 Chinese Restaurant

FOR: operation of a restaurant

and agree to the terms and conditions listed in said ordinance and to any additional term and conditions that the City Council shall deem appropriate.

X SHENG QIU DONG

PRINT - NAME OF APPLICANT

X

SIGNATURE OF APPLICANT

CITY HALL	POLICE DEPARTMENT	PARKS DEPARTMENT	HEALTH DEPARTMENT	MUNICIPAL COURT
955 Rue St. Francois	1700 North Highway 67	#1 James J. Eagan Drive	#1 St. Ferdinand Drive	1055 Rue St. Francois
Florissant, MO 63031	Florissant, MO 63033	Florissant, MO 63033	Florissant, MO 63031	Florissant, MO 63031
314 / 921-5700	314 / 831-7000	314 / 921-4466	314 / 839-7654	314 / 921-3322
Fax: 314 / 921-7111	Fax: 314 / 830-6045	Fax: 314 / 839-7672	Fax: 314 / 839-7656	Fax: 314 / 839-7663
TDD: 314 / 839-5142				

www.florissantmo.com

~ Gold for the Value of Elective Government ~ White for a Clean, Healthy City ~ Green for the Gift of Fertile Land ~

INTRODUCED BY COUNCILMAN SIAM
JANUARY 11, 2016

BILL NO. 9153

ORDINANCE NO. 8196

ORDINANCE AUTHORIZING A TRANSFER OF SPECIAL USE PERMIT NO. 6816 FROM SHENG QUI DONG D/B/A NO. 1 CHINESE RESTAURANT TO YANG ENTERPRISE INC. D/B/A NO. 1 CHINESE RESTAURANT FOR THE OPERATION OF A RESTAURANT LOCATED AT 2738 N. HWY 67.

WHEREAS, the Florissant Zoning Ordinance authorizes the Council of the City of Florissant, by Special Use Permit, after public hearing thereon, to permit the location and operation of a restaurant; and

WHEREAS, pursuant to Ordinance No. 6816 Sheng Qui Dong d/b/a No. 1 Chinese Restaurant was granted a Special Use Permit for the location and operation of a restaurant on the property known as 2738 N. Hwy 67; and

WHEREAS, an application has been filed by Yang Enterprise Inc. to transfer the Special Use Permit authorized by Ordinance No. 6816 to its name; and

WHEREAS, the City Council of the City of Florissant determined at its meeting on January 11, 2016 that the business operated under Ordinance No. 6816 would be operated in a substantially identical fashion as set out herein; and

WHEREAS, Yang Enterprise Inc. has accepted the terms and conditions set out in Ordinance No. 6816.

NOW, THEREFORE, BE IT ORDAINED BY THE COUNCIL OF THE CITY OF FLORISSANT, ST. LOUIS COUNTY, MISSOURI, AS FOLLOWS:

Section 1: The Special Use Permit authorized by Ordinance No. 6816 is hereby transferred from Sheng Qui Dong D/B/A No. 1 Chinese Restaurant to Yang Enterprise Inc. D/B/A No. 1 Chinese Restaurant for the operation of a restaurant located At 2738 N. Hwy 67.

Section 2: The terms and conditions of said Special Permit authorized by Ordinance No. 6816 shall remain in full force and effect.

Section 3: The Special Use Permit herein authorized shall terminate if the restaurant ceases operation for a period of more than one hundred eighty (180) days or when the named permittee ceases to be the owner and operator of the restaurant.

Section 4: This ordinance shall become in force and effect immediately upon its passage and approval.

Adopted this 25 day of JAN, 2016.

Joseph Eagan
President of the Council
City of Florissant

Approved this 26 day of JANUARY, 2016.

Thomas P. Schneider
Mayor, City of Florissant

ATTEST:

Karen Goodwin, MMC/MRCC
City Clerk

INTRODUCED BY COUNCILWOMAN PAGANO
NOVEMBER 28, 2016

BILL NO. 9244 ORDINANCE NO.

ORDINANCE TO AUTHORIZE AN AMENDMENT TO SPECIAL PERMIT NO. 7952 TO GLOBAL SIGNAL ACQUISITIONS II, LLC D/B/A CROWN CASTLE TO ALLOW FOR ADDITIONAL ANTENNAS ON EXISTING DISGUISED TOWER POLE FOR THE PROPERTY LOCATED AT 62 GRANDVIEW PLAZA SHOPPING CENTER.

WHEREAS, the Florissant Zoning Ordinance authorizes the City Council of the City of Florissant, by Special Use Permit, after public hearing thereon, to permit the location and maintenance of wireless telecommunication towers in the City of Florissant; and

WHEREAS, an application has been filed by Global Signal Acquisitions II, LLC D/B/A Crown Castle To Allow For Additional Antennas On Existing Disguised Tower Pole For The Property Located At 62 Grandview Plaza Shopping Center; and

WHEREAS, the Planning and Zoning Commission of the City of Florissant at their meeting of November 7, 2016 has recommended that a Special Permit be approved; and

WHEREAS, due notice of public hearing no. 16-11-034 on said application to be held on the 28th of November, 2016 at 7:30 P.M. by the Council of the City of Florissant was duly published, held and concluded; and

WHEREAS, the Council, following said public hearing, and after due and careful consideration, has concluded that amendments to a Special Permit for a wireless telecommunication tower would be in the best interest of the City of Florissant.

NOW, THEREFORE, BE IT ORDAINED BY THE COUNCIL OF THE CITY OF FLORISSANT, ST. LOUIS COUNTY, MISSOURI, AS FOLLOWS:

Section l: A Special Permit is hereby granted by Global Signal Acquisitions II, LLC D/B/A Crown Castle To Allow For Additional Antennas On Existing Disguised Tower Pole For The Property Located At 62 Grandview Plaza Shopping Center with the following stipulation:

1. Color of all new exposed equipment to match existing flagpole.

Section 2: This ordinance shall become in force and effect immediately upon its passage and approval.

Adopted this _____ day of _____, 2016.

_____
Jackie Pagano
President of the Council

Approved this _____ day of _____, 2016.

_____
Thomas P. Schneider
Mayor, City of Florissant

ATTEST:

_____
Karen Goodwin, MMC/MRCC
City Clerk

INTRODUCED BY COUNCILMAN SIAM
NOVEMBER 28, 2016

BILL NO. 9245 ORDINANCE NO.

ORDINANCE AUTHORIZING A TRANSFER OF SPECIAL USE PERMIT NO. 8196 FROM YANG ENTERPRISE INC. D/B/A NO. 1 CHINESE RESTAURANT TO SHENG QUI DONG D/B/A NO. 1 CHINESE RESTAURANT FOR THE OPERATION OF A RESTAURANT LOCATED AT 2738 N. HWY 67.

WHEREAS, the Florissant Zoning Ordinance authorizes the Council of the City of Florissant, by Special Use Permit, after public hearing thereon, to permit the location and operation of a restaurant; and

WHEREAS, pursuant to Ordinance No. 6816 Sheng Qui Dong d/b/a No. 1 Chinese Restaurant was granted a Special Use Permit for the location and operation of a restaurant on the property known as 2738 N. Hwy 67; and

WHERAS, Ordinance No. 8196 authorized the transfer of Special Use Permit No. 6816 from Sheng Qui Dong to Yang Enterprise Inc.; and

WHEREAS, an application has been filed by Sheng Qui Dong to transfer the Special Use Permit authorized by Ordinance No. 8196 to its name; and

WHEREAS, the City Council of the City of Florissant determined at its meeting on January 11, 2016 that the business operated under Ordinance No. 8196 would be operated in a substantially identical fashion as set out herein; and

WHEREAS, Yang Enterprise Inc. has accepted the terms and conditions set out in Ordinance No. 8196 as transferred.

NOW, THEREFORE, BE IT ORDAINED BY THE COUNCIL OF THE CITY OF FLORISSANT, ST. LOUIS COUNTY, MISSOURI, AS FOLLOWS:

<u>Section 1:</u> The Special Use Permit authorized by Ordinance No. 8196 as transferred from ordinance no. 6816 is hereby transferred from Yang Enterprise Inc. D/B/A No. 1 Chinese Restaurant to Sheng Qui Dong D/B/A No. 1 Chinese Restaurant to for the operation of a restaurant located At 2738 N. Hwy 67.

Section 2: The terms and conditions of said Special Permit authorized by Ordinance No. 6816 shall remain in full force and effect.

Section 3: The Special Use Permit herein authorized shall terminate if the restaurant ceases operation for a period of more than one hundred eighty (180) days or when the named permittee ceases to be the owner and operator of the restaurant.

Section 4: This ordinance shall become in force and effect immediately upon its passage and approval.

Adopted this _____ day of _____, 2016.

_____
Jackie Pagano
President of the Council
City of Florissant

Approved this _____ day of _____, 2016.

_____
Thomas P. Schneider
Mayor, City of Florissant

ATTEST:

_____
Karen Goodwin, MMC/MRCC
City Clerk

INTRODUCED BY COUNCIL AS A WHOLE
NOVEMBER 28, 2016

BILL NO. 9246 **ORDINANCE NO.**

AN ORDINANCE TO ENABLE THE CITY OF FLORISSANT, MISSOURI TO JOIN THE MISSOURI CLEAN ENERGY DISTRICT PURSUANT TO SECTIONS §67.2800 TO §67.2835, INCLUSIVE, RSMO., THE "PROPERTY ASSESSED CLEAN ENERGY ACT," AND STATING THE TERMS UNDER WHICH THE CITY WILL CONDUCT ACTIVITIES WITHIN THE CITY AS A MEMBER OF SUCH DISTRICT.

WHEREAS, the 95th General Assembly of Missouri enacted Sections §67.2800 to §67.2835, inclusive, RSMo., the "Property Assessment Clean Energy Act" (the "Act"); and

WHEREAS, the development, production, and efficient use of clean energy and renewable energy, as well as the installation of energy efficiency improvements to publicly and privately owned real property, will create jobs for residents of the City of Florissant, Missouri, advance the economic well-being and public and environmental health of the City of Florissant, Missouri, and contribute to the energy independence of our nation; and

WHEREAS, the primary intent of funding energy efficiency and renewable energy improvements pursuant to the Act is to promote the public purposes described above; and

WHEREAS, Section §67.2810.1 authorizes one or more Municipalities (as defined in Section §67.2800.7) to establish a Clean Energy Development Board to initiate and administer a Property Assessed Clean Energy ("PACE**")** Program so that owners of qualifying property can access funding for energy efficiency improvements or renewable energy improvements to their properties located in such Municipalities; and

WHEREAS, on January 3, 2011, a clean energy development board now named the Missouri Clean Energy District was created with the intention that all Municipalities within the State of Missouri would be eligible to join and participate by approving an appropriate ordinance or resolution; and

WHEREAS, it is in the best interests of the City of Florissant, Missouri and for the benefit of its residents to join and participate in the District.

NOW, THEREFORE, BE IT ORDAINED BY THE CITY COUNCIL OF THE CITY OF FLORISSANT, MISSOURI, AS FOLLOWS:

SECTION 1: The City hereby approves and authorizes joining and participation in the Missouri Clean Energy District.

SECTION 2: The City declares its intent that the provisions of this Ordinance shall be in conformity with federal and state laws. The City enacts this Ordinance pursuant to Sections 67.2800 to 67.2835 of the Missouri Revised Statutes (2000), as amended.

Subsection One. Title and Definitions.

A. Title. This Ordinance shall be known and may be cited as "The City of Florissant, Missouri Property Assessed Clean Energy (PACE) Ordinance."

B. Definitions. Except as specifically defined below, word and phrases used in this Ordinance shall have their customary meanings. Words and phrases defined in Section 67.2800.2 of the Missouri Revised Statutes (2000), as amended, shall have their defined meanings when used in this Ordinance. As used in this Ordinance, the following words and phrases shall have the meanings indicated.

"Missouri Clean Energy District" or "District" means the Missouri Clean Energy District.

"PACE Assessment" means a special assessment made against qualifying property in consideration of PACE Funding.

"PACE Funding" means funds provided to the owner(s) of qualified property by the District for an energy efficiency improvement.

"Qualifying Property" means real property located in The City of Florissant, Missouri.

Subsection Two. Program Administration.

The Missouri Clean Energy District shall administer the functions of the PACE Program within the City by

A. providing property owners with an application in order to apply for PACE Funds;

B. developing standards (meeting or exceeding City building and zoning codes) for the approval of Projects submitted by property owners;

C. reviewing applications and select qualified Projects;

D. entering into Assessment Contracts with property owners;

E. providing a copy of each executed Notice of Assessment to the County Assessor and causing a copy of each such Notice of Assessment to be recorded in the real estate records of the Recorder of Deeds for the County;

F. authorizing and disbursing the PACE Funds to the property owners;

G. receiving the PACE Assessment from the County Collector;

H. recording any lien, if needed, due to nonpayment of a PACE Assessment; and

I. exercising all powers granted by Section 67.2810.2 of the Missouri Revised Statutes (2000), as amended, including, but not limited to, the power to levy and collect special assessments under an assessment contract with a property owner.

Subsection Three. Liability of City Officials; Liability of City.

Notwithstanding any other provision of law to the contrary, officers and other officials of the City, the District and the County in which the City is located shall not be personally liable to any person for claims, of whatever kind or nature, under or related to the City's participation in the District's PACE Program, including, without limitation, claims for or related to uncollected PACE Assessments. The City has no liability to a property owner for or related to energy savings improvements funded under a PACE Program. The District shall for all purposes be considered an independent entity and shall not be considered a political subdivision of the City of Florissant.

SECTION 3: The Mayor of the City is hereby authorized to deliver a duly executed copy of this Ordinance to the Board of Directors of the District or its designee, together with the jurisdictional and geographic boundaries of the City for inclusion in the jurisdictional and geographic boundaries of the District.

SECTION 4: The City authorizes and directs the Mayor of Florissant to appoint a member of the Advisory Council of Missouri Clean Energy District and to notify the District of the person so appointed..

Section 5: This ordinance shall become in force and effect immediately upon its passage and approval.

Adopted this _____ day of _____, 2016.

_____
Jackie Pagano
President of the Council

Approved this _____ day of _____, 2016.

_____
Thomas P. Schneider
Mayor, City of Florissant

ATTEST:

_____
Karen Goodwin, MMC/MRCC
City Clerk

hero®

Your energy efficient future, today.

What is PACE?

Property Assessed Clean Energy

hero

© 2016 Renovate America, Inc. All Rights Reserved.

The Key to Energy Efficiency

RENOVATEAMERICA™

The Missouri Clean Energy District (MCED) has partnered with Renovate America to bring PACE financing to Missouri property owners through the HERO program.

MCeD.MO.GOV
Missouri Clean Energy District

Renovate America brings private capital to meet public policy objectives and is the only company to widely market PACE bonds with six securitizations complete.

Our proven model enables us to provide:

- Ongoing capital
- Industry-leading consumer protections
- Dependable support services
- Comprehensive technology infrastructure

...all at no cost to government.

© 2016 Renovate America, Inc. All Rights Reserved.

Property Assessed Clean Energy (PACE)

A moment of opportunity:

- Every year, 1 in 6 property owners replace a system that affects energy consumption

PACE Community Benefits:

- Reduced carbon emissions
- Less energy consumption
- Lower utility bills
- Creation of new, local jobs
- Increased property values

© 2016 Renovate America, Inc. All Rights Reserved.

Property Assessed Clean Energy (PACE) Financing

HERO is Property Assessed Clean Energy (PACE) financing, which is designed to make payments affordable by offering a fixed interest rate that is payable over an extended period of time along with property taxes.

PACE Overview:

- New way to pay for energy efficiency and renewable upgrades
- Financed measures become a fixed asset and are repaid overtime through a voluntary tax assessment on the property tax bill
- Eligibility based on home equity, not credit score

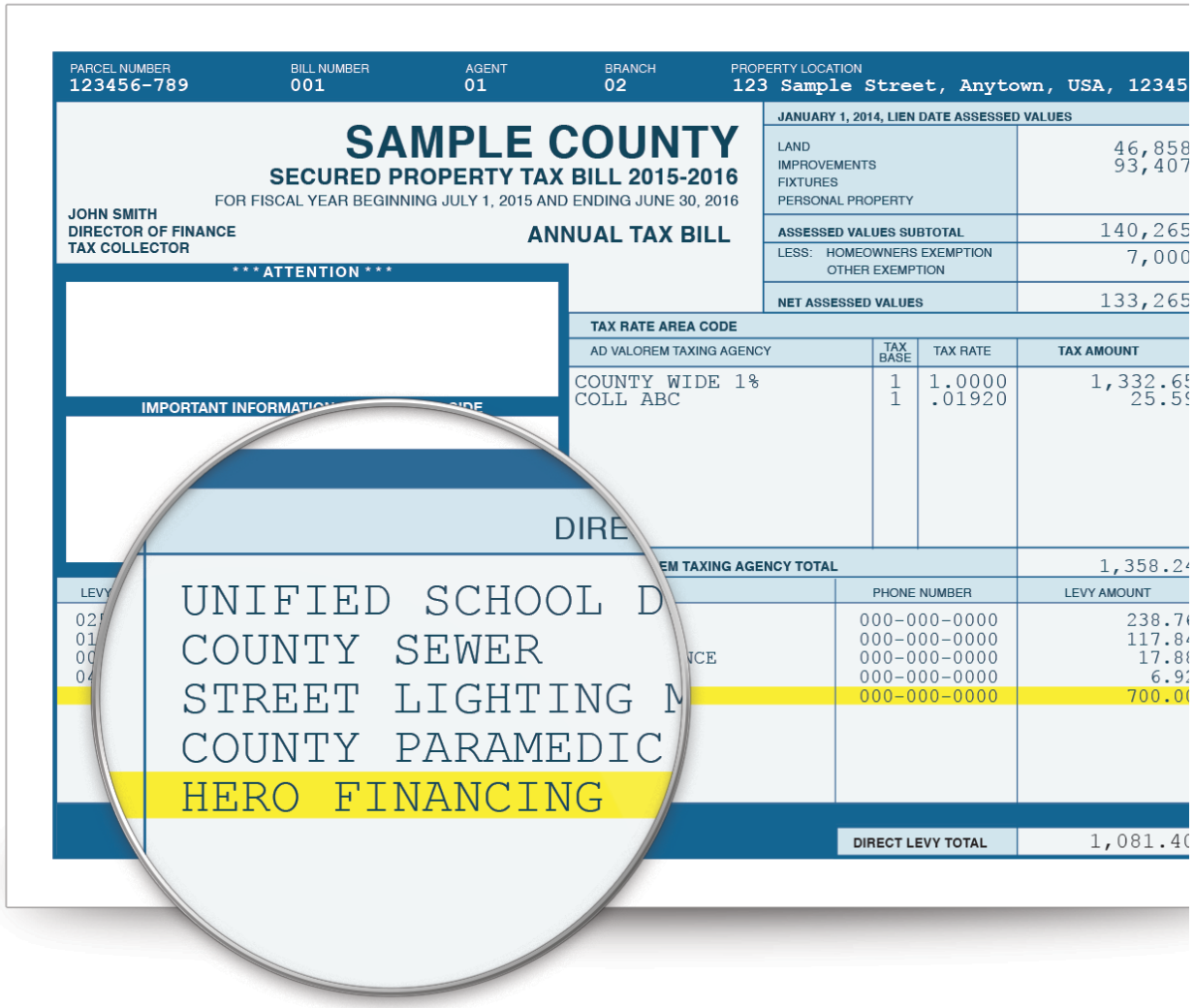

© 2016 Renovate America, Inc. All Rights Reserved.

HERO Advantage

When you have HERO in your community you are protecting property owners before, during and upon completion of every project.

HERO Features:

- 100% Financing
- Approvals Based on Home Equity
- Low Fixed Interest Rates
- 5, 10, 15 or 20 Year Payment Terms
- Consumer Protections

HERO Products:

Over one million models of efficiency products qualify, including:

- HVAC
- Windows & Doors
- Solar
- Roofing
- Insulation

Consumer Protection		Before HERO	After HERO
Training	Eligibility Requirements Proposal Automation Estimating Calculators Application Verification	✗	✓
Compliance	Marketing Product Eligibility Fair Pricing Permit Verification	✗	✓
Protection	Pay Upon Completion ID Verification Terms Confirmation In Good Standing Dispute Resolution	✗	✓

© 2016 Renovate America, Inc. All Rights Reserved.

Community Support:

Consumer Protection & Contractor Training

© 2016 Renovate America, Inc. All Rights Reserved.

Community Support

We provide dedicated support to property owners, contractors, real estate professionals, and municipalities through every step of the process.

Municipal Support

Dedicated Market Development Managers are assigned to every municipality to provide program education, continued support, and to respond to constituent inquiries.

Contractor Training

Our representatives in the field provide training and ongoing assistance on Program implementation.

Dispute Resolution

Every property owner complaint receives a full investigation. When necessary, our investigators will intervene to resolve any disputes.

HERO Property Advisors: 855-225-HERO

A dedicated division of specialists are available to assist real estate professionals and homeowners during the selling or refinancing process and answer any questions that may arise.

HERO Hotline: 855-HERO-411

Our full service call center is available to property owners and contractors from project start to completion.

© 2016 Renovate America, Inc. All Rights Reserved.

Consumer Protection Policy

HERO has developed industry leading Consumer Protection Policies for the home energy improvement financing sector:

Contractor ID Verification

HERO Registered Contractors are all verified, and are required to adhere to our industry-leading consumer protections.

Support Start to Finish

Our U.S. based support is available to contractors and property owners seven days a week.

Product Verification

In addition to the HERO Product Eligibility Specifications, all products installed must meet or exceed applicable local, state, and/or federal permitting, codes, and standards.

Payment Protection

No payments are made to the contractor until the property owner signs a completion certificate to verify the project has been completed to their satisfaction.

© 2016 Renovate America, Inc. All Rights Reserved.

HERO Protects Elderly Consumers

Compliance agents provide the following **additional services** for **elderly protection**:

- In-home visits (regular follow-ups)
- Contractor/property owner mediation services
- Liaise with Elder Protection Organizations
- 100% resolution of all reasonable matters

Additional **preventative controls** in place for homeowners **over the age of 64**:

- Trained specialists who ask specific questions to gauge property owner's capacity to enter into a contract
- Verbal confirmation of financing terms
- Verbal confirmation from homeowners before contractors are paid

© 2016 Renovate America, Inc. All Rights Reserved.

Technology Platform

© 2016 Renovate America, Inc. All Rights Reserved.

HERO Supports Government Partners

HERO Gov provides real-time access to data so that government partners can see – at any time – the impact of the program on their community.

Features:

Up-to-the minute reports provide data on:

- Economic stimulus & impact
- Environmental impact & savings
- Drill-down on metrics by community
- Ability to view different time periods

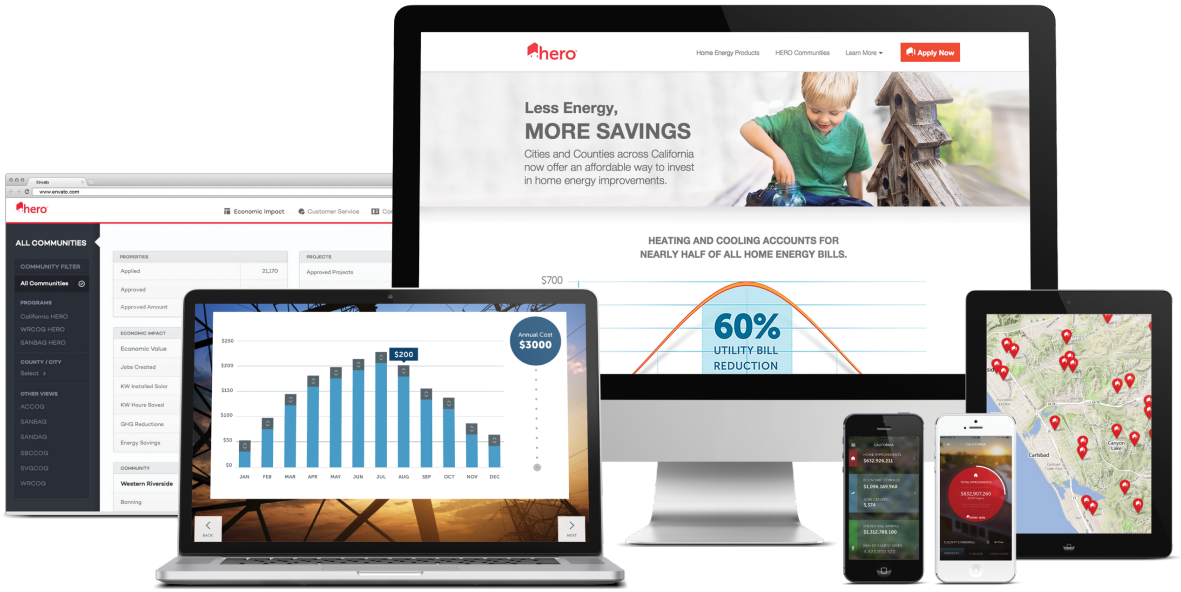

© 2016 Renovate America, Inc. All Rights Reserved.

HERO Supports Contractors

HERO Pro provides the most comprehensive suite of software tools for estimating and financing.

Features:

- Proposal tools
- Estimating calculators
- Job tracking dashboard
- Electronic signatures
- Step-by-step process
- Financing document generation

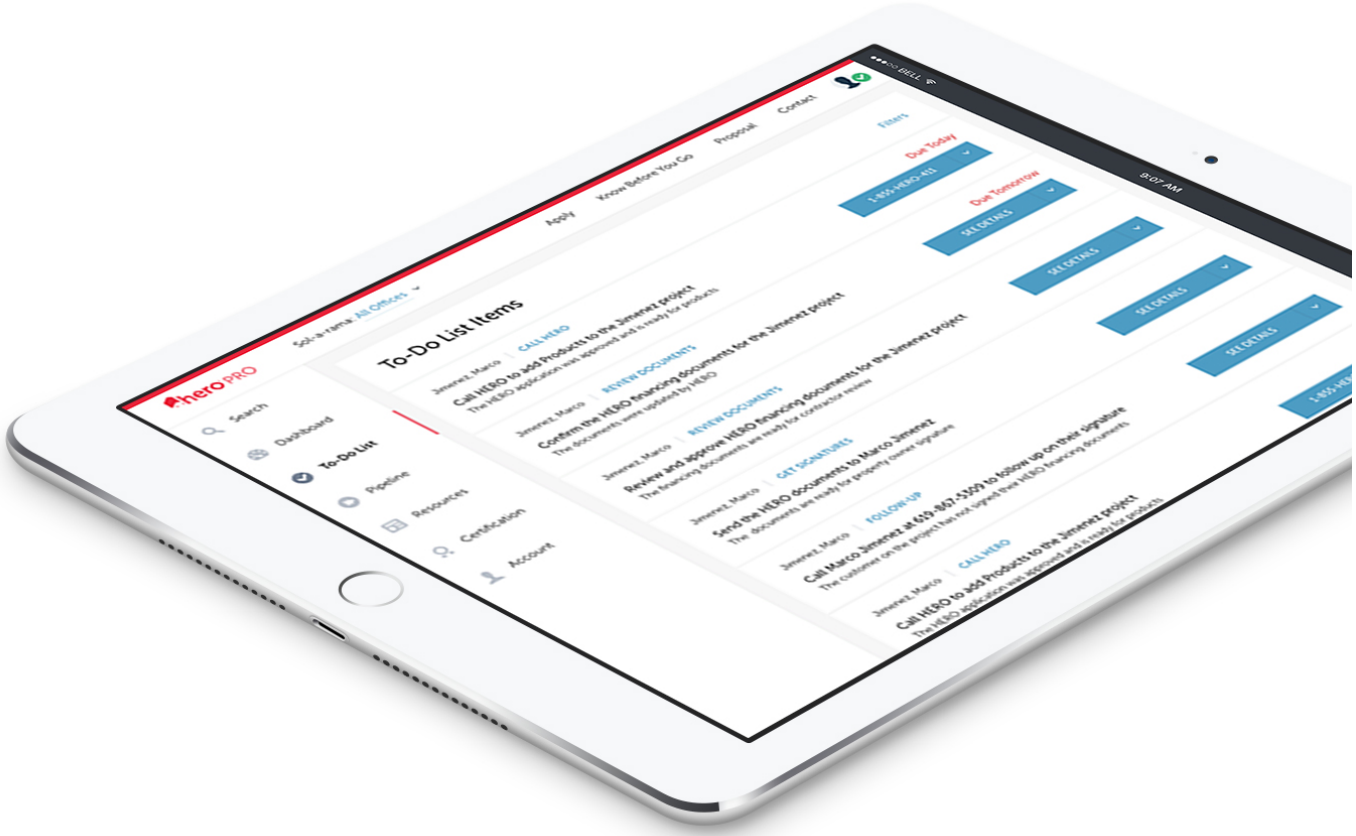

© 2016 Renovate America, Inc. All Rights Reserved.

HERO in Action:

Success & Awards

© 2016 Renovate America, Inc. All Rights Reserved.

The HERO Story in California – Success Since 2012

125,000+ approved applications for $7.3 Billion

61,500+ homes improved

$1.45+ Billion funded in upgrades

12,300+ local jobs created

$2.51+ Billion in annual economic impact

2.51+ Million tons of abated CO_2 emissions

$2.53+ Billion in utility bill savings

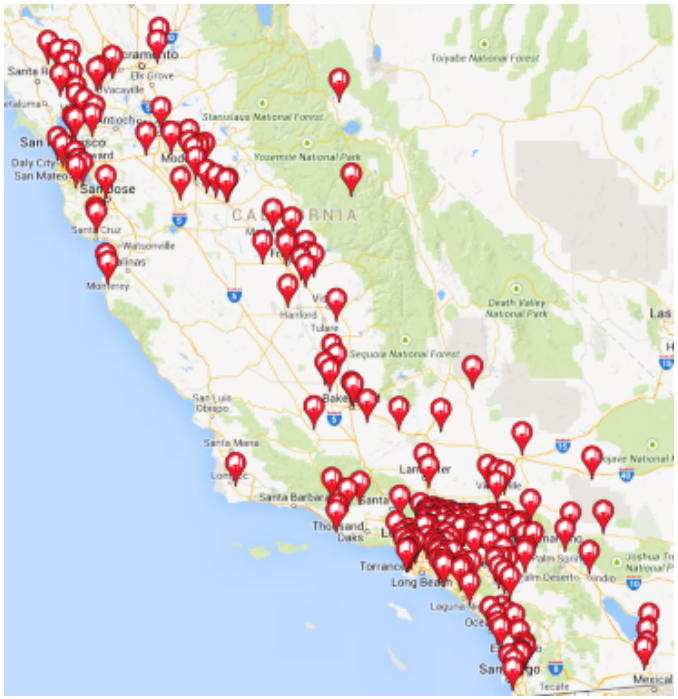

97% Said that HERO Program **Representatives are friendly**, knowledgeable and professional.

96% Said that they would **recommend the HERO Program** to a friend or relative.

Numbers reflect HERO program lifetime results through April 2016

© 2016 Renovate America, Inc. All Rights Reserved.

Awards & Recognition

U.S. Climate Leadership for Innovative Partnerships
U.S. Environmental Protection Agency

White House Water Summit
Office of Science and Technology Policy

Environmental & Economic Partnership
Governor of California

President's Award for Excellence
Southern CA Association of Governments

Model Community Achievement Award
South Coast Air Quality Management District

Best Residential Partnership
U.S. Green Building Council

Best of the Best
Urban Land Institute

Business Achievement Award
Climate Change Business Journal

© 2016 Renovate America, Inc. All Rights Reserved.

Frequently Asked Questions

What is PACE?

PACE stands for Property Assessed Clean Energy. It is a government initiative that enables the financing of energy-efficient and renewable-energy upgrades to buildings, both residential and commercial, to be repaid over time through a voluntary tax assessment. PACE helps local economies grow and creates new, skilled jobs. Energy-efficiency savings also reduce CO2 emissions and offer energy independence.

What is the HERO Program, and how does it work?

The Home Energy Renovation Opportunity (HERO) Program is the PACE program offered by Renovate America under in partnership with the Missouri Clean Energy District (MCED.) Renovate America offers a network of trusted contractors and industry-leading consumer protections that help more property owners confidently invest in upgrading their homes with energy-efficiency and renewable energy renovations.

What types of home improvements are eligible?

Over one million products are eligible for HERO. Typical projects include: solar photovoltaic (PV) systems; energy-efficient space heating, ventilation and air conditioning (HVAC); energy-efficient windows, skylights, and doors; solar thermal water heating; air sealing and weatherization; insulation; and indoor energy-efficient light fixtures.

What are the costs and benefits of offering HERO in my community?

There are no costs to offering the HERO Program and it does not require dedicated staff resources to develop or implement the Program. HERO will benefit your community by reducing energy consumption, stimulating local business, creating sustainable jobs, and lowering greenhouse gas emissions.

© 2016 Renovate America, Inc. All Rights Reserved.

hero®

Your energy efficient future, today.

PACE Consumer Protection Policies

Version 1.0

(Residential PACE Program)

OVERVIEW

Property assessed clean energy ("PACE") programs enable an unprecedented range of homeowners to access energy efficiency, renewable energy, and water efficiency measures that improve the financial, functional and environmental aspects of home ownership. Improvements such as these make homes less costly to operate and more comfortable to live in, while simultaneously reducing energy and water consumption. Without PACE Programs many homeowners would have no, or costly, access to such benefits.

PACE Programs ("PACE Programs" or the "Program"), including the government authority sponsoring and administering them ("Authority", Program Administrator" or "Administrator") and, where applicable, the entity or entities who help implement them ("Partner"), deliver tools and resources that enable homeowners to make smart, informed and responsible choices regarding such measures ("Measures"). Appropriate use of such tools is the responsibility of all Programs, which means that care needs to be taken with homeowners before, during and after origination of Program financing. In other words, consumer protections that serve homeowners must be a core value of the Program, the Authority and the Partner. In this document, "Partner" refers to the government authority in all cases where the Program does not include a third party non-government partner.

The baseline consumer protection policies of the Program cover the following areas: (i) Risk, (ii) Disclosures and Documentation, (iii) Financing Terms, (iv) Operations, (v) Post-Funding Support, (vi) Data Security, (vii) Privacy, (viii) Marketing and Communications, (ix) Protected Classes, (x) Contractors, (xi) Eligible Products, (xii) Pricing, (xiii) Reporting, (xiv) Closing & Funding and (xv) Examination. These Policies provide homeowners with a greater level of consumer protection than any other form of financing. They also guide the Program's implementation, enabling the transformation of its potential into tangible benefits for homeowners.

1. Risk

<u>Policy Summary</u>: The Program blends traditional credit risk considerations together with statutory requirements and legislative policy to develop risk criteria that are fitted to the Program. These criteria take into account the unique risk profile that this form of financing presents to enable qualifying homeowners to access it. While this process will exclude unqualified homeowners and properties, special consideration has been given to developing inclusive standards. These criteria examine four key attributes of every financed project: (i) the real property on which the improvements will be installed ("Property" or "Properties"), (ii) the encumbrances presently recorded against the Property, (iii) the nature of the improvements to be installed; and (iv) the homeowner's mortgage and property tax payment history.

1.1. <u>Properties</u>. Consistent with foundational considerations, it is the policy of the Program to make the Program available to the entirety of the existing residential housing stock in political boundaries of the Program. Properties for which this form of financing is not available include: (i) commercial properties (including residential properties comprising four (4) or more units), (ii) new properties under construction and (iii) tax exempt properties (properties not subject to levy), such as tribal, non-profit or state-owned residential properties. If requested in good faith by the homeowner applying for the Program, the Partner is responsible for completing a "second look" eligibility review of all applications related to properties initially determined to be excluded, re-examining the specific attributes of the Property in question and confirming or modifying the original determination.

1.2. <u>Encumbrances</u>. The encumbrance profile of Properties is an important element of the decisioning process for Program participation. The Program is designed to harness unused financing capacity of homes in which eligible improvements are installed. Such financing is inappropriate if it burdens Properties and their owners too greatly. Accordingly, Properties eligible for Program financing will have the following attributes:

1.2.1. All mortgage-related debt on the Property may not exceed 90% of the Property's fair market value ("FMV"), or assessed value if market value data is unavailable or unreliable, at the time of initial approval;

1.2.2. Reliability of the Program FMV model should be verified through an accepted and regular audit process, sampling appraisal data as a means of measurement and verification;

1.2.3. The financing may not exceed (i) fifteen percent (15%) of the FMV of the Property, up to the first seven hundred thousand dollars ($700,000) of the Property's FMV, and (ii) ten percent (10%) of the remaining value of the Property above seven hundred thousand dollars ($700,000);

1.2.4. The total mortgage-related debt on the underlying Property plus Program financing

may not exceed the FMV of the Property; and

1.2.5. The total amount of any annual property taxes and assessments shall not exceed five percent (5%) of the Property's FMV, determined at the time Program financing is approved.

1.3. Eligible Improvements. The Program provides financing for a broad range of eligible products and projects permanently-affixed to the Property, the details of which are set forth in Section 11 below. The Program is not available to finance ineligible products and projects, which comprise everything not specified in Section 11. While the Program is responsible for confirming compliance with the Section 11 requirements, it is not responsible for determining post-installation energy performance, savings or efficacy of such products or projects. The Program relies on U.S. Department of Energy, the Environmental Protection Agency and other government agencies in determining what constitutes an Eligible Improvement.

1.4. Homeowners. PACE Program assessments appear as line items on property tax bills and homeowners repay their financing when they pay their property tax bills. The mortgage and property tax payment history of homeowners of record thus is an important decisioning element of Program eligibility criteria. Accordingly, at the time of application, homeowners eligible for Program financing will have status and payment histories that are consistent with the following:

1.4.1. The Applicants are the owners of record;

1.4.2. Property tax payments for the assessed Property are current. Additionally, the homeowner must certify that there is no more than one late payment for the shorter of (i) the previous three years, or (ii) since the present homeowner acquired the Property;

1.4.3. Homeowner(s) are current on all mortgage debt, and have been late on such payments no more than once (30 days maximum) during the 12-month period preceding funding;

1.4.4. No homeowner applicant has had any active bankruptcies within the last 7 years; provided, however, that this criterion can be met if a homeowner's bankruptcy was discharged between two and seven years before the application date, and the homeowner(s) have had no payments (mortgage and non-mortgage) past due for more than 60 days in the most recent 24 months; and

1.4.5. Homeowner(s) have no involuntary lien(s) recorded against the Property in excess of $1,000.

2. Disclosures & Documentation

Policy Summary: The documentation of the Program gives it shape, integrity and enforceability. Program participation documentation embodies principles key to the Program such as clarity, fairness, compliance, disclosure, knowledge and completeness. A reader who has spent time with the documentation should develop an unambiguous understanding of each and every right, risk and obligation associated with the Program's financing product. PACE is a new form of financing that, while sharing some features of traditional financing, presents new considerations for homeowners. Disclosures covering Program financing's unique repayment cycle (annual or semiannual) and the Federal Housing Finance Authority announcement regarding payoff of Program financing at the time of sale or refinance are among the new considerations. Best practices counsel the Program to disclose traditional financing terms (e.g., interest rates, financing term, payment amounts) as well. In the end, a homeowner who understands the Program's disclosures will be informed and have a clear understanding of the Program's traditional and non-traditional features.

2.1. Document timing. Before commencement of any Program-financed project, a homeowner needs to: (i) submit an application; (ii) receive approval of the Measures from the Partner; and (iii) execute documentation covering the terms described in this Section and in the Disclosures summarized in this Section. Following construction of the Measures, a homeowner needs to: (i) execute an acknowledgement that the installation of the Measures has been completed satisfactorily; and (ii) receive a final summary of costs and payments. Delivery to, and execution of all such documentation by, the homeowner is the responsibility of the Partner.

2.2. Terms. Terms that are fundamental to the Program and that need to be reflected in its documents comprise: (i) the amount financed, fees and capitalized interest included, (ii) the repayment process and schedule, (iii) the payment amounts, (iv) a term that does not exceed the useful life of the improvements, (v) the rate of interest charged, (vi) a rate of interest that is fixed (not variable), (vii) a payment schedule that fully amortizes the amount financed, (viii) the nature of the lien created upon recordation, (ix) the specific improvements to be installed, (x) the 3-day right to cancel the financing, (xi) the right to withhold approval of payment until the project is complete, and (xii) Section 5899.2 rights for solar lease improvements. It is the responsibility of the Partner to prepare, deliver and arrange for execution of documents reflecting such terms.

2.3. Disclosures Policies. Disclosures heighten homeowner's awareness of key program financing terms and risks that appear in the Program terms and documentation. It is the policy of the Program that Partners confirm delivery to, and receipt by, homeowners of

these disclosures, and obtain written acknowledgement that homeowners have read and understand them. The following comprise the key disclosures of the Program provided by Partners in a financing summary in the form attached hereto as Attachment A.

Disclosures	Description
Term of financing	The maximum time period of the financing
Amount financed	The total amount financed, including fees and capitalized interest
Annual payment amount	The amount due each year, even if paid in semi-annual installments or through impound payments
Annual interest rate/APR	The effective interest rate after taking into account all fees and capitalized interest
Improvements financed	The Measures installed
FHFA risks	The risk that the homeowner may need to pay off the PACE assessment at the time of sale or refinance
Right to cancel	The 3-day right to rescind the financing
Prepayment	The right to prepay the Program financing without penalty

The following comprise additional key disclosures of the Program provided by Partners.

Disclosures	Description
Program overview	A document or section of a document that provides a comprehensive summary of the Program, including a summary of a homeowner's rights and obligations
Property tax repayment process	Payment of a homeowner's property tax bill that will include a line item related to the installed Measures
Tax benefits	Benefits associated with the purchase of certain Measures and the annual payments related to them.
Privacy	A notice describing the privacy policies of the Program
Federal disclosures	Those appearing in the Program application
Foreclosure	The foreclosure process in the event of a homeowner default

2.4 Confirmation of Terms. For all Program financing applications associated with contractors that are either new to the Program or are on a Partner's "watch list" (i.e. those contractors that are not "Top Rated Contractors" defined below), it is the policy of the Program that such Partner confirm live by telephone with the homeowner applicant each Program financing term listed in (b)-(g) of this Section 2.4 below. These confirmation requirements do not apply to contractors who have reached the Partner's top rating category (the "Top Rated Contractors"). For Top Rated Contractors, it is the policy of the Program that the Partner conduct randomized calls to homeowners to confirm financing terms.

Notwithstanding the above, irrespective of the contractor with whom the Program financing is associated, it is the policy of the Program that the Partners confirm live by telephone for each applicant who is over 64 years old the Program financing terms listed in (a)-(g) of this Section 2.4 below, and any other special categories of homeowners as designated by the Program. For avoidance of doubt, for homeowners over 64 years old, a voicemail message does not satisfy the requirement of Program financing term confirmation under this Section 2.4.

When confirming terms of a Program financing with a homeowner, the Partners will request the homeowner to describe generally the improvement(s) being financed using the Program financing, and will ascertain that the homeowner understands:

(a) The reason for the specific improvement(s) being obtained by such homeowner.
(b) His or her total estimated annual payment.
(c) The date his or her first tax payment will be due.
(d) The term of the Program financing.
(e) Any additional fees (including recording fees) that will be charged to him or her.
(f) That payments for the Program financing will be added to his or her property tax bill and will cause the property tax bill to increase.
(g) That he or she may make payments on the Program financing either directly to the county assessor's office or through his or her mortgage impound account.

3. FUNDING

Policy Summary: PACE is a new form of financing that, while sharing some features of traditional financing, presents new considerations for financing capital sources and structures. Best practices counsel the Program to proactively solicit feedback from Program stakeholders and homeowners and incorporate learnings into policy improvements which benefit homeowners.

Interest Rates. It is the policy of the Program that the Partner offers fixed simple interest rates, and payments that fully amortize the obligation. Variable interest rates or negative amortization financing terms are not permitted.

Sustainable funding source. It is the policy of the Program that Partners establish a sustainable source of capital for funding PACE financed projects separate from the Authority's general fund or budget and have access to capital markets to ensure funding of qualified projects is available on a consistent basis. A Partner must demonstrate the capacity to fund assessments that the Administrator anticipates originating through such Partner over the six (6) month period immediately following the Administrator's review of such Partners' financial statements.

Subordination. The Program is not required but may offer the capability to accommodate homebuyers and homeowners by offering subordination of certain rights of its PACE assessment lien to the lien of a mortgage or deed of trust. The subordination may provide the lien under a mortgage or deed of trust with senior rights such that the lender will be induced to make a loan on a PACE-assessed property. The subordination option may be made available to homebuyers and homeowners in accordance with policy agreed upon by the Authority and the Partner.

Contractor fees. It is the policy of the Program that Partners can only charge fees to contractors offering Program financing as long as Partners (i) clearly and conspicuously disclose such fees to homeowners and (ii) require that contractors absorb such obligations and not pass such fees on to homeowners.

4. OPERATIONS

Policy Summary: Operations delivers the Program to homeowners. Operations commercializes, productizes and draws on the work completed in a broad range of disciplines by the Partner or its Partner, such as sales, training, risk, contractor engagement, municipal engagement, accounting, finance, legal, capital markets, compliance, business development, marketing, government affairs and corporate development. While each operating unit incorporates thoughtful and highly effective consumer protections in the work it produces, Operations is the gatekeeper responsible for assuring that the Program has the people, processes, tools and technology necessary to deliver to homeowners the Program financing product, as well as the consumer protections described in these Policies.

Operational consumer protection policies. It is the policy of the Program that the Administrator and its Partner develop and provide people, processes, tools and technology necessary to support the consumer protection measures described in detail elsewhere in this policy, including: (i) risk and underwriting processes; (ii) terms and documentation delivery systems; (iii) documentation, maintenance and retrieval processes; (iv) disclosure development, delivery and acknowledgment receipt; (v) post-funding support for homeowners and other stakeholders such as real estate professionals; (vi) data security measures; (vii) privacy policy development and protections; (viii) marketing and communication oversight; (ix) protected class data and communication processes; (x) contractor management and engagement; (xi) eligible product database and/or list development and maintenance; (xii) implementation of the maximum financing amounts; (xiii) key metrics reporting; (xiv) closing and funding processes (including the ability to fulfill financing obligations); (xv) examination data production; and (xvi) implementation of procedures to identify and prohibit conflicts of interest within and associated with the Program.

5. Post-Funding Homeowner Support

Policy Summary: A public/private partnership is at the core of the Program. This partnership carries with it elevated consumer protection responsibilities that apply to the Program with as much significance during the post-funding period as they do during the time of application and origination. Establishing and operating an executive office responsible for customer care that responds to inquiries, complaints, contractor and workmanship concerns, product performance questions and related matters for the lifecycle of the improvements financed is fundamental to the consumer protections that the Program provides.

5.1. Proactive Engagement. It is the policy of the Program that the Partner and its Partner proactively to monitor and test the consumer protections delivered to homeowners, and to request feedback from homeowners and contractors to identify areas in need of improvement.

5.2. Onboarding. It is the policy of the Program that Partners develop and implement a post-installation onboarding procedure to reinforce key characteristics of the Program, such as those highlighted in the Program disclosures.

5.3. Payments. It is the policy of the Program that the Partner have disclosures and resources in place to resolve homeowner questions regarding matters such as impound account catch up payments, payment timing inquires and payment amount reconciliation. It is also the policy of the Program that the Partner implement procedures for responding to requests for partial or full prepayment of their PACE property tax assessment in a timely and complete manner.

5.4. Inquiries and complaints. It is the policy of the Program that the Partner receive, manage, track, timely resolve, and report on all inquiries and complaints from homeowners. This policy contemplates development of a team with the skills necessary to perform inspections, meet with homeowners and contractors, investigate matters, and mediate resolutions with homeowners and contractors. The Partner must proactively work to resolve inquiries and complaints in a reasonable and timely manner and in accordance with the Program guidelines and must make communication for homeowners available during regular business hours by phone, email and facsimile communication.

5.5. Real estate transactions. It is the policy of the Program that the Partner develop capabilities to assist homeowners who are refinancing or selling their Properties. The Partner must support real estate professionals providing services to refinance and sales transactions for properties with PACE assessments.

6. Data Security

Policy Summary: Trust is fundamental to any financing relationship, and Program financing is no exception. The public/private partnership at the center of the Program, as well as the confidential relationship homeowners have with the Program Partner mandate that any market-ready Program be in robust compliance with sturdy cyber-security standards, and in particular develop secure and tested processes that protect homeowner personal identifiable information at points of potential vulnerability, especially during the application process.

6.1. Information systems. It is the policy of the Program that the Partner develop and comply with secure and tested processes to protect the personal identifiable information of the homeowner described in Section 7 below. Such secure and tested processes should, at a minimum, include:

6.1.1. A cyber-security policy and protocol that, at a minimum, requires data encryption "during transmission" and "at rest," and compliance with sturdy cyber-security standards.

6.1.2. The Partner is responsible for controlling access to information, based upon, job function and need-to-know criteria.

6.1.3. The Partner is responsible for taking security measures that protect the security and confidentiality of consumer records and information in proportion to the sensitivity of the information, including, without limitation, requiring all computers and other devices containing any confidential consumer information to have all drives encrypted with industry standard encryption software.

6.1.4. The Partner is responsible for monitoring and logging all remote access to its systems, whether through VPN or other means.

6.1.5. Data security policies are subject to auditing and penetration testing conducted by an independent auditor hired by the Authority at least annually and any time a change is made that may have any potential impact on the servers, security policies or user rights.

6.1.6 The Partner is responsible for ensuring minimum viable configurations are in place on all servers. All firewalls should have continuous logging enabled. In addition, access control lists and audited server configurations should be used to ensure that data security is maintained.

6.2. Personnel.

6.2.1. The Partner is responsible for informing and enforcing the compliance with the Program's data privacy and security policies on the part of every employee, contractor, vendor, agent, service provider, representative, and associate who is exposed to personal identifiable information of homeowners.

6.2.2. The Partner is responsible for implementing protections and controls to prevent unauthorized copying, disclosure, or other misuse of sensitive consumer information.

7. PRIVACY

Policy Summary: The trusting and confidential relationship that exists between homeowners and Program extends to the Partner's use of homeowner data. Compliance with the Gramm- Leach-Bliley Act as well as the establishment of clear opt-in and opt-out protocols for information sharing are the pillars of the Program's privacy policy. More broadly, Program must protect and manage sensitive consumer information, must respect the privacy of all homeowners, and must implement robust controls to prevent unauthorized collection, use and disclosure of such information.

The following summarizes the Program's privacy policy:

7.1. Privacy policy. The Program obtains sensitive consumer information from homeowners as part of the application process for Program participation or through other homeowner touch points with the Program. It is the policy of the Program that the Partner develops and delivers to homeowners who apply for the Program or who otherwise provide personal identifiable information (e.g., full name, home address, social security numbers, date of birth,) a privacy policy that complies with state and federal law (e.g., the Gramm-Leach-Bliley Act) and, in particular, prohibits sharing with third parties personal identifying information of homeowners without the homeowners' express authorization except where expressly permitted by state and federal law. Such privacy policy will cover (i) the sources from which sensitive consumer information is obtained, (ii) the Partner's use of sensitive consumer information, and (iii) a mechanism by which a consumer may opt-out of sharing information. The Partner will deliver to homeowners any updates to such privacy policies.

7.2. Application process. It is the policy of the Program that all personal identifying information provided by a homeowner to the Partner during the application process is provided directly by the homeowner to the Partner. The Partners will establish processes and controls to ensure that personal identifiable information of a homeowner is obtained directly from such homeowner (or his verifiable legal representative or attorney in fact) and not from a contractor or other third party.

8. Marketing & Communications

Policy Summary: Clear, informative, truthful, balanced, transparent and complete communications are essential for the Program. The stakeholders of any Program include (without limitation) homeowners, contractors, the Authority, government officials and staff, investors, finance partners, real estate professionals and lenders. Communications, acts and practices that mislead stakeholders add ineligible expense to PACE financing or to the Program, abuse stakeholders, and otherwise fail to meet the core communication standards of appropriateness for the Program and are not acceptable.

8.1. Prohibited practices. It is the policy of the Program to prohibit practices that are or could appear to be unfair, deceptive, abusive, and/or misleading, that violate laws or regulations, that provide tax advice, that are inappropriate, incomplete or are inconsistent with the Program's purpose (e.g., use of check facsimiles to dramatize the amount of PACE Program financing available or presented as if a negotiable instrument). Marketing practices that are likely to add unnecessary expense to a homeowner (e.g., paying consumers for applications), that unlawfully use sensitive consumer data or that violate any other law or regulation (including, for example, practices related to telemarketing) are prohibited.

8.2. Permitted practices. It is the policy of the Program to adhere to all legal and regulatory requirements (e.g., telemarketing) pertaining to its advertising and marketing efforts. On the basis of providing clear and concise communication to consumers, any practice that promotes informed decisioning on the part of homeowners and is not prohibited as described in section 8.1 above is permitted. The Partner is responsible for developing, delivering to and enforcing marketing guidelines for the Program's Registered Contractors. Any marketing materials that fall outside of marketing guidelines established must be approved by the Partner to ensure that they are not unfair, deceptive, abusive and/or misleading.

8.3. Tax advice. It is the policy of the Program that no Partner, contractor or third party (who is not a tax expert) may provide tax advice to consumers regarding their Program financing which includes making affirmative statements or claims as to the tax deductibility of the payments. Homeowners are encouraged to seek the advice of an expert regarding tax matters related to the Program. The Program shall monitor and test the sales practices of employees and contractors to confirm adherence to the policy set forth in this Section 8.3.

8.4. Payments in Exchange for Financing. It is the policy of the Program that no Partner, contractor or Affiliated Individual may provide a direct cash payment or other thing of value to a homeowner explicitly in exchange for such homeowner's selecting Program

financing. For avoidance of doubt, the limitations provided in this Section 8.4 are not intended to prevent the Program from offering to homeowners, contractors or Affiliated Individuals promotions that are not explicitly part of the exchange referred to in the preceding sentence.

9. Protected Classes

Policy Summary: It is the Partner's responsibility to ensure compliance with all state and federal laws that cover individuals in protected classes (e.g., race, religion, color, marital status, sex, national origin, citizenship, presence of children, disability, gender, age and/or sexual orientation because an applicant receives income from a public assistance program, or because an applicant has in good faith exercised any right under the Consumer Credit Protection Act.) Heightened protections for homeowners over 64 years old, such as confirming understanding of financing terms and project specifications, is a focus of the Program. The Partner is responsible for protecting against intended and unintended non-compliance with such standards, and in particular for providing legally unbiased access to, and decisioning of, requests for Program financing.

9.1. General. It is the policy of the Program that controls be designed to monitor and test compliance with all state and federal laws covering homeowners in protected classes.

9.2. Elders. It is the responsibility of the Partner to develop and implement a program that validates elder homeowner (i.e., homeowners over 64 years old) understanding of the eligible improvement project for which they are seeking Program financing, including the terms of such financing.

9.3 Financing Access and Decisioning. It is the responsibility of the Partner to provide legally unbiased access to, and decisioning of, requests for Program participation.

10. CONTRACTOR REQUIREMENTS

Policy Summary: Contractors and their sales persons are one of the primary means through which homeowners become aware of Program participation options. Contractors and their sales persons enter into contracts with the Partner, and register with all relevant state and local licensing boards and agencies. Contractors are required to follow a code of conduct, maintain policies of insurance, post bonds, follow marketing requirements, complete training courses, among other similar obligations, all of which are designed to assure positive and productive homeowner interaction with the Program.

10.1. Policies. It is the policy of the Program that all contractors who sell, install, or manage subcontractors who install, eligible improvements will have executed and that all such contractors and all employees, entities, owners, partners, principals, independent contractors, third party agents or other person who perform any services for the contractor in connection with a Program financing (collectively, the "Affiliated Individuals") meet the requirements of the Program's Contractor Participation Agreement, which include:

10.1.1. Compliance with the current Registered Contractor code of conduct, a sample of which is attached hereto as Attachment B or other code of conduct that embodies the principles outlined in Attachment B;

10.1.2. Maintenance of an active license, and be in good standing, with the California Contractor State License Board ("CSLB"), including compliance with the CSLB (or equivalent agency or program) insurance and bonding requirements;

10.1.3. Execution of the Program's Contractor Participation Agreement only by a person who is listed as an Responsible Managing Owner ("RMO"), Responsible Managing Employee ("RME"), Responsible Managing Manager ("RMG") , Responsible Managing Member ("RMM"), sole owner or qualifying partner with the CSLB and who is authorized to act on behalf of, and who is responsible for the actions of, a Registered Contractor (a "Qualifying Individual");

10.1.4. Oversight and management of employees, independent contractors and subcontractors who provide services to Registered Contractors accessing the Program;

10.1.5. Meeting all other state and local licensing, training and permitting requirements;

10.1.6. Compliance with the Program's marketing policies; and

10.1.7. Ensuring all Affiliated Individuals register with the Program.

10.2. New Contractors. Regarding Registered Contractors new to the Program, it is the policy that the Partner:

10.2.1. Has a specified probationary period (i.e., place the new Registered Contractors on a watch list) until the new Registered Contractors have completed the required number of Measures;

10.2.2. Has procedures in place, during the Registered Contractor probationary period, to provide additional quality assurance steps for Measures completed by the Registered Contractors on the watch list; and

10.2.3. Has procedures in place to review Registered Contractor work to confirm satisfactory completion of projects conducted during the probationary period for which Program financing is used.

10.3 Contractor Management. It is the policy that the Partner implement contractor management systems and procedures that manage and track contractor training and compliance violations on an individual and company basis.

10.4 Contractor Training. It is the policy of the Program that each Partner make available contractor training regarding, at a minimum, the following: (i) the applicable contractor code of conduct terms as required by the Program, (ii) protected classes, including, without limitation, elder protection, and (iii) other consumer protection measures as required by the Program.

10.5 Remedial Action. Partners warn, suspend or terminate a Registered Contractor and/or Affiliated Individual from the Program based on violations of the Contractor Participation Agreement. The Program does not accept Program applications processed by suspended or terminated contractors and/or associated representatives.

11. Eligible Products

<u>Policy Summary</u>: The Program enables and encourages homeowners to install Measures on their homes which are designed but not guaranteed to save water or energy. The Program is responsible for implementing practices and controls (e.g., eligible product databases and product confirmation processes) ensuring that financing is used only for eligible Measures, and that it is not provided for ineligible ones. Program product eligibility criteria ensure that property owners are financing improvements which are industry recognized for achieving higher levels of home energy or water efficiency. While the Program is responsible for confirming compliance with the initial capacities of such products, it is not responsible for determining post-installation energy performance, savings or efficacy of such Measures.

11.1. <u>Policies</u>. Consistent with the objectives of the PACE enabling legislation, it is the policy of the Program through consultation with the Partner and the Authority to:

11.1.1. Establish, and maintain an eligible products database and/or list, documenting the associated eligibility specifications for each product that conform to the requirements outlined in Attachment C hereto;

11.1.2. Define a process for adding or modifying the eligible product database;

11.1.3. Ensure that eligible product energy efficiency/water efficiency/energy generation (as applicable) performance standards are calibrated and verified using performance criteria that the U.S. Department of Energy, U.S. Environmental Protection Agency, the California Energy Commission and/or other federal and state agencies or other reputable third parties has established;

11.1.4. Use credible third party sources to determine the useful life of the product, which will be used to set the maximum term for the Program's financing; and

11.1.5. Require that the product is permanently affixed to the Property.

11.2. <u>Procedures</u>. It is the policy of the Program that the Partner establish procedures confirming that the homeowner applying for Program financing intends to install eligible products, and that at the time of funding such improvements have been installed.

11.3. <u>Ineligible Products</u>.

11.3.1. Financing of ineligible products under the Program is prohibited.

11.3.2. Products that are not included on the eligible products list or in the eligible products database can be submitted for review by the Program, if a homeowner has a good faith reason to believe they should have been included.

12. MAXIMUM FINANCING AMOUNT

<u>Policy Summary</u>: Many homeowners cannot readily access price information regarding the installation of energy efficiency, renewable energy and water conservation improvements for their homes, and cost often is a key economic consideration. While the Program does not set price controls, it implements a maximum financing amount ("MFA") procedure based upon the fair market value of the Measures. The MFA sets the ceiling for amounts that can be financed.

The Program's maximum financing amount policies provide as follows:

12.1. It is the policy of the Program to develop maximum financing amounts based on market data and the Partner's experience, but not to set pricing for installation of eligible products and projects. In evaluating project pricing, the Partner takes into account regional factors that may contribute to the pricing of improvements.

12.2. It is the policy of the Program that each Partner will, at a minimum, establish an MFA for each product type (e.g. for central air conditioners, solar PV systems, solar thermal systems and artificial turf).

12.3. Within each MFA, there is a low to high range of justifiable pricing, depending on the particular product within a product type (e.g. there may be different types of central air conditioners, solar PV systems, solar thermal systems and artificial turf). It is the policy of the Program that each Partner will establish product/project attribute related pricing rules that dictate what pricing within such low to high MFA range is justified.

12.4. It is the policy of the Program that each Partner establish processes and systems for purposes of enforcing the MFA rules (as described in Section 12.3) for every project.

12.5. A product may only be funded for an amount that is greater than the MFA for such product if the amount exceeding the MFA is justified by reasonable standards that are validated and documented through processes and systems acceptable to the Authority.

13. REPORTING

Policy Summary: Reporting the economic and environmental results of Program participation is essential for the Program, Partners, elected officials, environmental agencies, the investment community, the real estate and mortgage industry and many other stakeholders. Metrics such as economic stimulus dollars invested, greenhouse gas reduction, the number of Measures funded, the amounts funded, renewable energy production and energy savings serve this need. The Partner is responsible for producing, on a quarterly basis, a key metrics report.

13.1. Reporting categories. It is the policy of the Program that Program statistics reporting and estimated impact metrics in the following categories be developed and reported quarterly to the Authority: (i) number of projects funded, (ii) project amount funded, (iii) estimated amount of energy savings, (iv) estimated amount of renewable energy produced, (v) estimated amount of water savings, (vi) estimated amount of greenhouse gas emissions reductions, and (vii) estimated number of jobs created.

13.2. Reporting standards. It is the policy of the Program that all data collected for the quarterly metrics reports be developed and collected using standardized, third party verified methodologies. The methodologies and supporting assumptions and/or sources must be made available to the Authority by the Partner. It is the responsibility of the Partner to develop reports consistent with each of categories listed above and to test and verify the data collection and reporting methods and models used. All reports shall include only aggregate data, excluding any sensitive customer information.

13.3 Participation in CAEATFA. Residential PACE programs operating in California must participate in the PACE Reserve program of the California Alternative Energy and Advanced Transportation Authority. Accordingly, the Programs must report bi-annually on program activity to CAEATFA.

14. Closing & Funding

Policy Summary: The Program provides limited purpose financing to homeowners, and not general purpose financing that is common among traditional sources of financing. The Program has front-end (e.g., eligible product call-in requirements) and pre-funding (e.g., completion certificates and permits) procedures designed to confirm that their financing dollars are used for permissible purposes. A policy requiring such procedures is essential to protecting the integrity of the Program.

14.1. Installation Completion Sign-off. It is the policy of the Program to confirm, before funding, that the eligible products financed are installed, operational and in a condition that is acceptable to the homeowner and the contractor, and to require that the homeowner and the contractor attest to such by signing a document stating that all products have been installed to the homeowner's satisfaction and in accordance with product specifications. It is the responsibility of the Partner to confirm any such document is signed within the maximum allowable installation time as specified by the Program

14.2. Permits. It is the policy of the Program for homeowners seeking Program financing to obtain required permits for the installation of Measures and provide verification thereof upon request.

14.3. Funding. It is the policy of the Program to disburse funds only for projects that are complete.

14.4. Recording. It is the policy of the Program to record the Notice of Assessment and Payment of Contractual Assessment Required documentation in a manner consistent with state law.

14.5. Asset verification. It is the policy of the Program to confirm that product(s) listed on the Completion Certificate and for which Program financing has been provided have been installed and that the Partner develop and implement a randomized onsite inspection protocol acceptable to the Authority.

Attachment A

Financing Estimate

Save this Financing Estimate to compare with your Final Payment Summary.

DATE ISSUED	2/15/2013	**TERM**	10 years
PROPERTY OWNERS	Michael Jones and Mary Stone 123 Anywhere Street Anytown, ST 12345	**PURPOSE**	Home Improvement
		PRODUCT	Partner Program
		IDENTIFICATION #	123456789
PROPERTY	456 Somewhere Avenue Anytown, ST 12345	**RATE LOCK**	☐ NO ☒ YES, until 9/14/2015 After the expiration date interest rates and closing costs can change.

Products and Costs

Product Cost	$16,900.00	• *Building Envelope- Wall Installation* • *High Efficiency Pool Equipment- Pool Pump* • *Windows, Doors, and Skylights- Exterior Windows* • *High Efficiency HVAC- Whole House Fan*
Financing Cost	$970.30	*See closing costs details*
Prepaid interest	$1,445.45	
Other Costs	$130.00	
Financed Amount	$19,445.89	*Total amount of the assessment*

Terms

		Can this amount increase after closing?	
Financed Amount	$19,445.89	NO	*Total amount of the assessment*
Interest Rate	7.69%	NO	
Annual Principal, Interest and Other Costs	$2,892.62	YES	*Annual administrative fee is subject to change*
		Does the financing have these features?	
Prepayment Penalty		NO	*Interest will be due to the next bond call date*
Balloon Payment		NO	

Projected Payments

Payment Calculation	**Years 1-10**	
Principal & Interest	$2,857.62	
Annual Administrative Fee	+ $35.00	*Annual administrative fee is subject to change*
Estimated Total Annual Payment	**$2,892.62**	

Your payment will be added to your property bill for the next 10 years. If your project is completed and all your documents are submitted and approved by June 15, 2016, your first payment will be included on your November 2016 tax bill. If your documents are submitted and/or approved after June 15, 2016, your first payment will be included on your November 2017 tax bill. Estimated payment information on this document assumes all documentation is approved on September 14, 2016.

DRAFT

Closing Cost Details

Costs at Closing

Estimated Closing Costs	$2,545.75*	Includes $970.30 in Financing Costs + $130 in Other Costs + $1,445.45 in Prepaid Interest. *See Calculating Cash to Close summary for details.* **While no cash is required to close this transaction, these items are included in the amount financed. If you do not wish to finance these items, you may pay them at the time of funding.*
Estimated Cash to Close	$0	*See Calculating Cash to Close summary for details.*

Financing Costs

A. Origination Charges	**$970.30**
Application Fee	$0
Underwriting and Bond Issuance Fee	$970.30
B. Services	**$0**
Appraisal Fee	$0
Credit Report Fee	$0
Tax Monitoring Fee	$0
Tax Status Research Fee	$0
Title- Title Search Fee	$0
C. TOTAL FINANCING COSTS (A + B)	**$970.30**

Other Costs

D. Recording and Administrative Fees	**$130.00**
County Recording Fee	$95.00
Program Administrative Fee (Annual)	$35.00

Prepaid Interest

E. Prepaid Interest *(from closing to first payment)*	**$1,445.45**
F. TOTAL CLOSING COSTS (C + D + E)	**$2,545.75**

Calculating Cash to Close

Total Closing Costs (F)	$2,545.75
Closing Costs Financed (Paid from Financed Amount)	- $2,545.75
Down Payment/Funds from Borrower	$0
Estimated Cash to Close	**$0**

DRAFT

Additional Information About This Financing

PACE PROVIDER	Partner Program
EMAIL	info@partnerprogram.com
PHONE	(855) 0000-411

Comparisons

Use these measures to compare this financing with other forms of financing.

In 10 Years	$19,445.89	*Principal you will have paid off.*
	+ $8,065.01	*Amount of interest you will have paid.*
	+ $1,415.30	*Amount of financing and other costs you will have paid.*
	= $28,926.20	*Total you will have paid in principal, interest, financing and other costs.*
Annual Percentage Rate (APR)	9.47%	*Your costs over the term expressed as a rate. This is not your interest rate.*
Total Interest Percentage (TIP)	46.95%	*The total amount of interest that you will pay over the term as a percentage of your financing amount.*

Other Considerations

Assumption

If you sell or transfer this property to another person, we

☒ will allow, this person to assume this financing on the original terms.

☐ will not allow assumption of this financing on the original terms.

I understand, if i refinance my home, my mortgage company may require me to pay off the remaining balance. If i sell my home, the buyer or their mortgage company may require me to payoff the remaining balance.

1 PO INITIAL

Payments

Your payments will be added to your property tax bill. Whether you pay your property taxes through your mortgage payment, using an impound account, or if you pay them directly to the tax collector you need to save an estimated $2,892.62 for your first payment in November 2016. After your first payment if you pay your property taxes through an impound account your monthly mortgage payment should adjust to cover your increased property tax bill.

1 PO INITIAL

Tax Benefits

Consult your tax advisor regarding tax credits, tax deductibility, and other tax benefits of the HERO Program. You are responsible for submitting appropriate document with your tax return.

1 PO INITIAL

Late Payment

If your tax payment is late you are subject to penalties and late fees established by the tax collector.

Confirm Receipt

By signing, you are only confirming that you have received this form. You do not have to accept this financing because you have signed or received this form.

Property Owner Signature	Date	Property Owner Signature	Date
Property Owner Signature	Date	Property Owner Signature	Date

DRAFT

Attachment B

1.1. Sample Registered Contractor Code of Conduct

1.1.1. Registered Contractors, on behalf of themselves and the employees, entities, owners, partners, principals, independent contractors, third party agents or other person (the "Registered Individuals") who perform any sales, installation, advising, construction, creative services, digital marketing, lead generation, inspection or any other services in connection with the Registered Contractor on its behalf, shall:

1.1.1.1. Conduct business with Property Owners on a legal, respectful, ethical, fair and equitable basis.

1.1.1.2. Ensure that Registered Individuals present identification (as determined by the PACE Program) establishing their affiliation with a Registered Contractor upon initial contact with a Property Owner, whether such contact occurs in connection with canvassing, sales, service or any other occasion upon which such representatives enter onto a Property Owner's premises.

1.1.1.3. Not provide, or even appear to provide, tax advice to Property Owners regarding any aspect of PACE Program financing. Any PACE Program that provides a simple tool on its website is merely intended to provide Property Owners the ability to easily quantify the effects if they determine that some or all of the PACE Program payments are deductible. If asked about the tax aspects of PACE Program financing, Registered Contractors should urge Property Owners to consult their tax advisor.

1.1.1.4. Present Property Owners with the full and complete set of Partner Financing Program Documents, which include all pages of the Assessment Contract, Right to Cancel, Application, Financing Summary, and all other PACE Program documents and instruct the Property Owners to contact the Partner directly with any PACE Financing questions.

1.1.1.5. Present the Completion Certificate for signature to the Property Owner only after completion of the project and when the Property Owner is satisfied and is ready for the PACE Program to release funds to the Registered Contractor.

1.1.1.6. Analyze accurately each Property Owner's energy usage, and anticipated energy savings likely to result from any Eligible Product installation following standards that can withstand independent, third party review and analysis.

1.1.1.7. Seek always to provide high value products and services best suited to a Property Owner's request or needs and comply with the Eligible Product requirements of the PACE Program. Install only Eligible Products for reasonable, market-based prices that are within industry price guidelines and that do not exceed the PACE Program maximum guidelines.

1.1.1.8. Protect Property Owners, especially those in protected classes such as elders, from and against any exercise of undue influence that could lead to adverse purchasing, pricing and financing decisions.

1.1.1.9. Maintain active, participating and good standing status as a member of the CSLB, and participate in continuing education in its/his/her chosen area of expertise, as well as in the PACE Program requirements, policies and procedures.

1.1.1.10. Have a written contract with the Property Owner stating all proposed work and services.

1.1.1.11. Obtain all legally required building permits, on behalf of the Property Owner, and follow through in obtaining sign off or approval from any authority with jurisdiction over any project on which Contractor works.

1.1.1.12. Comply with all federal, state and local laws, ordinances, rules and regulations.

1.1.1.13. Use sound and legally compliant hiring practices, including but not limited to conducting credit and background and screening checks on all employees, temporary staff, contract employees, subcontractors and third party associates to assure that such persons comply with Registered Contractor's legal and ethical obligations described herein.

1.1.1.14. Provide PACE Program training for all employees, subcontractors and third party associates of Registered Contractors.

1.1.1.15. Maintain and provide the PACE Program with copies of requested documents that relate to projects financed by or through the PACE Program, as well as documents that relate to Registered Contractor certifications, licenses, or insurance/bonding.

1.1.1.16. Act in good faith to resolve promptly any complaint or grievance that a Property Owner may file with the PACE Program or the Registered Contractor.

1.1.1.17. Document and retain records regarding the resolution of all Property Owner disputes with a Registered Contractor for the PACE Program's review and assessment.

1.1.1.18. Comply with the letter and the intent of all provisions of the California Business and Professions Code relevant to the Registered Contractor's business.

1.1.1.19. Comply with all local, state and federal marketing and telemarketing laws, regulations and rules, including but not limited to the Telephone Consumer Protection Act, the Older American's Act (including Elder Rights Protection principles) and the Truth in Lending Act.

Attachment C

PACE Residential Eligible Product Guidelines

ALL PRODUCTS

In addition to the PACE Product Eligibility Specifications listed below, all product specifications and installation quality must meet or exceed applicable local, state, and/or federal permitting, codes, and standards. Project stakeholders are fully and solely responsible for ensuring product compliance with applicable sections of the current California Building Energy Efficiency Standards (Title 24, Part 6, Subchapters 1, 2, 7, 9).

Renewable & Alternative Energy Products

PRODUCT CATEGORY	PRODUCT TYPE	ELIGIBILITY SPECIFICATIONS	MAXIMUM TERM (YEARS)
Solar Photovoltaic	Solar Panel	1. Product must be listed as California Solar Initiative incentive-eligible photovoltaic module in compliance with CA-SB1 guidelines. 2. Installation Contractor must be registered with the California Solar Initiative Program and have the correct CSLB licensure to install solar systems. 3. System must be grid connected unless the property is not currently connected to the grid. 4. Installed per manufacturer specifications.	20
	Solar Inverter	1. Product must be listed as California Solar Initiative eligible inverter in compliance with CA-SB1 guidelines. 2. Installation contractor must be registered with the California Solar Initiative Program and have the correct CSLB licensure to install solar systems. 3. System must be grid connected unless the property is not currently connected to the grid. 4. Installed per manufacturer specifications.	20
Solar Thermal	Solar Water Heating	1. System must have the OG-300 System Certification by the Solar Rating and Certification Corporation (SRCC). 2. Auxiliary tank must be residential class. 3. Installed per manufacturer specifications.	15
	Solar Pool Heating	1. Product must have the OG-100 Collector Certification by the Solar Rating and Certification Corporation (SRCC). 2. Installed per manufacturer specs.	15

PACE Residential Eligible Product Guidelines

PRODUCT CATEGORY	PRODUCT TYPE	ELIGIBILITY SPECIFICATIONS	MAXIMUM TERM (YEARS)
Alternative Energy	Small Wind Turbine	1. Product must be certified by the Small Wind Certification Council as meeting the requirements of the AWEA Small Wind Turbine Performance and Safety Standard (9.1-2009). 2. Product must be grid connected unless the property is not currently connected to the grid. 3. Installed per manufacturer specs.	20
	Advanced Energy Storage System	This product type specification is currently under revision and is not currently available. We hope to have this product type available again as an eligible option for projects in the very near future.	--
	Electric Vehicle Charging Station	1. Product must certified as meeting the UL Subject 2594 Standard Testing for Charging Stations. 2. Product must be a Level 2 charger with SAE J1772 standard charging plug. 3. Installed per manufacturer specs.	10
	Stationary Fuel Cell Power System	1. System must be certified as meeting the ANSI/CSA America FC1 standard. 2. Installed per manufacturer specs. 3. Installed in accordance with local code and/or the Standard for the Installation of Stationary Fuel Cell Power Plants, NFPA 853, the National Fuel Gas Code, ANSI Z223.1/NFPA 54, National Electrical Code, NFPA 70, as applicable.	15

PACE Residential Eligible Product Guidelines

Energy Efficiency Products

PRODUCT CATEGORY	PRODUCT TYPE	ELIGIBILITY SPECIFICATIONS	MAXIMUM TERM (YEARS)
High-Efficiency Heating, Ventilation, and Air Conditioning (HVAC)	Air-Source Heat Pump	1. Product must be AHRI Certified and AHRI number must be provided. 2. Product must be ENERGY STAR Certified: a. Split: SEER ≥ 14.5 and EER ≥ 12 and HSPF ≥ 8.2. b. Package: SEER ≥ 14 and EER ≥ 11 and HSPF ≥ 8.0. 3. Must replace an existing product. 4. Installed per manufacturer specs.	15
	Central Air Conditioner	1. Product must be AHRI Certified and AHRI number must be provided. 2. Product must be ENERGY STAR Certified: a. Split: SEER ≥ 14.5 and EER ≥ 12. b. Package: SEER ≥ 14 and ≥ EER 11. 3. Must replace an existing product. 4. Installed per manufacturer specs.	15
	Furnace	1. Product must be AHRI Certified and AHRI number must be provided. 2. Product efficiency must be: • AFUE ≥ 80% with ECM, or • AFUE ≥ 90% 3. Must replace an existing product. 4. Installed per manufacturer specs.	20
	Evaporative Cooler	1. Product must be listed in California Energy Commission Appliance Efficiency Database. 2. Must have separate ducting system—independent of the air conditioning and heating duct system. 3. Must be permanently installed through wall or on the roof; window installed product is not eligible. 4. Installed per manufacturer specs.	10
	Boiler	1. Product must be AHRI Certified and AHRI number must be provided. 2. Product must be ENERGY STAR Certified: AFUE ≥ 85%. 3. Must replace an existing product. 4. Installed per manufacturer specs.	20

PACE Residential Eligible Product Guidelines

PRODUCT CATEGORY	PRODUCT TYPE	ELIGIBILITY SPECIFICATIONS	MAXIMUM TERM (YEARS)
High-Efficiency Heating, Ventilation, and Air Conditioning (HVAC)	Geothermal Heat Pump	1. Product must be ENERGY STAR Certified: a. Closed Loop Water-to-Air: ≥ 14.1 EER and ≥ 3.3 COP b. Open Loop Water-to-Air: ≥ 16.2 EER and ≥ 3.6 COP c. Closed Loop Water-to-Water: ≥ 15.1 EER and ≥ 3.0 COP d. Open Loop Water-to-Water: ≥ 19.1 EER and ≥ 3.4 COP e. DGX: ≥ 15.0 EER and ≥ 3.5 COP 2. Product must replace an existing product. 3. Installed per manufacturer specs.	15
	Hydronic Radiant Heating System	1. System must be powered by a high-efficiency PACE-qualified heating source. 2. Installed per manufacturer specs.	15
	Mini-Split Air Conditioner	1. Product must be AHRI certified and AHRI number must be provided. 2. Efficiency: ≥ 15 SEER. 3. Product must replace an existing product. 5. Installed per manufacturer specs.	15
	Mini-Split Heat Pump	1. Product must be AHRI certified and AHRI number must be provided. 2. Efficiency: ≥ 15 SEER and HSPF ≥ 8.2. 3. Product must replace an existing product. 4. Installed per manufacturer specs.	15
	Biomass / Wood Stove	1. Product must be certified and listed on the EPA Certified Wood Stoves list. 2. Installed per manufacturer specs.	15
	Duct Replacement	1. Duct system leakage: a. Partial Replacement: ≤ 15% total system nominal flow b. Full Replacement: ≤ 6% total system nominal flow 2. Duct Insulation R-Value ≥ R-6. 3. Installed per Title 24, Part 6.	20

PACE Residential Eligible Product Guidelines

PRODUCT CATEGORY	PRODUCT TYPE	ELIGIBILITY SPECIFICATIONS	MAXIMUM TERM (YEARS)
High-Efficiency Heating, Ventilation, and Air Conditioning (HVAC)	Heat/Energy Recovery Ventilator	1. Product must be certified by the Home Ventilation Institute (HVI). 2. Installed per manufacturer specs.	10
	Exhaust Ventilation Fixture	1. Product must be ENERGY STAR Certified. 2. Installed per manufacturer specs.	10
	Whole House Fan	1. Product must be listed in California Energy Commission Appliance Efficiency Database. 2. Installed per manufacturer specs.	20
	Attic Ventilation Fixture	1. Product must have thermostat control. 2. Installed per manufacturer specs.	15
	Ceiling Fan	1. Product must be ENERGY STAR Certified. 2. Installed per manufacturer specs.	10
Windows, Doors, and Skylights	Window	1. Product must be NFRC Certified: a. U-Factor ≤ 0.32 and SHGC ≤ 0.30. 2. Product must replace existing product. 3. Product NFRC label to be submitted with Completion Certificate. 4. Installed per manufacturer specs. 5. Product must meet Title 24 requirements.	20
	Door	1. Product must be NFRC Certified: a. Opaque: U-Factor ≤ 0.21 and SHGC = Any b. ≤ 1/2-Lite: U ≤ 0.27 and SHGC ≤ 0.30 c. > 1/2-Lite: U ≤ 0.32 and SHGC ≤ 0.30 2. Product must replace existing product. 3. Product NFRC label to be submitted with Completion Certificate. 4. Installed per manufacturer specs.	20
	Skylights and Tubular Daylighting Device	1. Product must be NFRC Certified: a. U-Factor ≤ 0.55 and SHGC ≤ 0.30. 2. NFRC label for each different product to be submitted with Completion Certificate. 3. Installed per manufacturer specs.	20
	Applied Window Film	1. Product must be NFRC Certified. 2. NFRC label for each different product to be submitted with Completion Certificate. 3. Installed per manufacturer specs.	10

PACE Residential Eligible Product Guidelines

PRODUCT CATEGORY	PRODUCT TYPE	ELIGIBILITY SPECIFICATIONS	MAXIMUM TERM (YEARS)
Windows, Doors, and Skylights	Exterior Window Shading Device	1. Product must be permanently secured to the exterior of the property with attachments or fasteners that are not intended for removal. 2. Each product must be installed to provide shading to at least one window or door. 3. Product must be one of the following styles: a. Patio Covers b. Fixed Awnings c. Operable Awnings d. Operable Shutters e. Solar Screens 4. Product is <u>only</u> eligible to be installed on properties located within California Building Climate Zones 2, and 6-16. 5. Other exterior structural products including, but not limited to, sunroom enclosures, exterior decks, balconies, roof overhangs, detached/free-standing arbors, detached/free-standing pergolas, and/or carports are <u>NOT</u> eligible. 6. Interior window shading products including, but not limited to, blinds, shutters, shades, or curtains are <u>NOT</u> eligible. 7. Installed per manufacturer specs.	10
Building Envelope	Cool Wall Coating	1. Product must be a preapproved PACE Cool Wall Coating product. 2. Product must have solar reflectance ≥ 0.5 as tested to ASTM C1549-09 standard. 3. Product primary application surface must be exterior wall surfaces of conditioned buildings. 4. Product is <u>only</u> eligible to be installed on properties located within CA Building Climate Zones 4-10 and 12-15. 5. Installed per manufacturer specs.	20
	Cool Roof - Prescriptive	1. Product must meet the following specifications: a. Low-Slope Roofs (≤ 2:12): ≥ 0.5 Aged (3 yrs.) Solar Reflectance b. Steep-Slope Roofs (> 2:12): ≥ 0.15 Aged Solar Reflectance 2. Product also must meet Title 24, Part 6. 3. Product must be listed in the CRRC or ENERGY STAR product directories.	20

PACE Residential Eligible Product Guidelines

PRODUCT CATEGORY	PRODUCT TYPE	ELIGIBILITY SPECIFICATIONS	MAXIMUM TERM (YEARS)
Building Envelope	Cool Roof - Performance	1. If a Cool Roof - Prescriptive roofing product is not specified, one of the following cool roof performance measures must also be implemented in the scope of work: a. Install ≥ 1" Air-space between the top of the roof deck to the bottom of the roofing product. b. Insulate attic floor to R-value ≥ 38. c. Seal & Insulate attic HVAC duct work to R-8 and ≤ 6% leakage. d. Install an eligible radiant barrier. e. Insulate roof deck to R-value ≥ 4. f. Install roof construction with thermal mass over a membrane with a weight of at least 25 lb/ft^2. 2. Project must comply with CA Title 24 Part 6. Project stakeholder is fully and solely responsible to meet any such additional requirements.	20
	Attic Insulation	1. R-value ≥ 38. 2. Installed per CEC QII Standards.	20
	Wall Insulation	1. R-value ≥ 13 to full framing cavity depth. 2. Installed per CEC QII Standards.	20
	Under-Floor Insulation	1. R-value ≥ 19 to full joist depth. 2. Installed per CEC QII Standards.	20
	Radiant Barrier	1. Emissivity ≤ 0.1. 2. Reflectivity ≥ 0.9. 3. Installed per manufacturer specs.	20
	Air Sealing	1. Performed to BPI, ENERGY STAR, and ASHRAE 62.2 guidelines.	10
High-Efficiency Water Heating	Gas Storage Water Heater	1. Product must be ENERGY STAR Certified. 2. EF ≥ 0.67. 3. Installed per manufacturer specs.	10
	Electric Heat Pump Storage Water Heater	1. Product must be ENERGY STAR Certified. 2. EF ≥ 2.0. 3. Installed per manufacturer specs.	10
	Gas Tankless Water Heater	1. Product must be ENERGY STAR Certified. 2. EF ≥ 0.82. 3. Installed per manufacturer specs.	10

PACE Residential Eligible Product Guidelines

PRODUCT CATEGORY	PRODUCT TYPE	ELIGIBILITY SPECIFICATIONS	MAXIMUM TERM (YEARS)
High-Efficiency Pool Equipment	Pool Pump and Motor	1. Product must be ENERGY STAR Certified: a. Single Speed Pump: EF ≥ 3.8 for single speed b. Multi/Variable Speed/Flow: EF ≥ 3.8 for most efficient speed. 2. Product must replace existing product. 3. Installed per manufacturer specs.	10
	Electric Heat Pump Pool Heater	1. Product must be listed in California Energy Commission Appliance Efficiency Database. 2. COP ≥ 4.5. 3. Installed per manufacturer specs.	10
	Gas Pool Heater	1. Product must be listed in California Energy Commission Appliance Efficiency Database. 2. Thermal Efficiency ≥ 83%. 3. Installed per manufacturer specs.	10
	Automatic Pool Cover	1. Product must be an automatic pool cover UL certified as meeting ASTM F1346 Standard Performance Specification. 2. Product must be permanently installed on an existing swimming pool. 3. Installed per manufacturer specs. 4. Manual swimming pool covers are not eligible.	10
High-Efficiency Lighting	Indoor Lighting Fixture	1. Product must be ENERGY STAR Certified and meet Title 24, Part 6 requirements. 2. Product must be permanently installed. 3. Installed per manufacturer specs.	20
	Outdoor Lighting Fixture	1. Product must be ENERGY STAR Certified and meet Title 24, Part 6 requirements. 2. Product must be permanently installed. 3. Installed per manufacturer specs.	20
	Lighting Control	1. Product must be listed in the California Energy Commission Appliance Efficiency Database. 2. Eligible control types include: a. Automatic Time-Switch b. Daylight/Photo- Sensor c. Dimmer d. Occupant/Motion/Vacancy Sensor 3. Install per manufacturer specs.	20

PACE Residential Eligible Product Guidelines

Water Efficiency Products

PRODUCT CATEGORY	PRODUCT TYPE	ELIGIBILITY SPECIFICATIONS	MAXIMUM TERM (YEARS)
Indoor Water Efficiency	High-Efficiency Toilet Fixture	1. Product must be listed in the CEC Appliance Efficiency Database. 2. Toilet and urinals fixtures are eligible. 3. Flow rate ≤ 1.28 GPF. 4. Installed per manufacturer specs.	20
	High-Efficiency Faucet Fitting	1. Product must be listed in the CEC Appliance Efficiency Database. 2. Flow rate ≤ 1.5 GPM. 3. Must be permanently installed. 4. Installed per manufacturer specs.	15
	High-Efficiency Showerhead	1. Product must be listed in the CEC Appliance Efficiency Database. 2. Flow ≤ 2.0 GPM. 3. Installed per manufacturer specs.	15
	Hot Water Delivery System	1. System meets the definition of one of the following water delivery options: a. Dedicated Recirculation Line b. Whole House Manifold System c. Demand-initiated Recirculating System d. Core Plumbing System 2. Installed per manufacturer specs.	15
Outdoor Water Efficiency	High-Efficiency Sprinkler Nozzle	1. Product must be on SoCal Water Smart Qualified Sprinkler Nozzle product list. 2. Installed per manufacturer specs.	10
	Weather-Based Irrigation Controller	1. Product must be WaterSense Qualified. 2. Installed per manufacturer specs.	10
	Drip Irrigation	1. Product installed be installed in turf, garden, planter, or flower bed area. 2. Installed per manufacturer specs.	10
	Rainwater Catchment System	1. Sized to hold ≥ 50 gallons at one time. 2. Must be permanently installed. 3. Installed per manufacturer specs.	20
	Gray Water System	1. System must meet California Plumbing Code, Chapter 16A. 2. Product must comply with local code and permitting requirements. 3. Eligible system types include: a. Single-Fixture b. Multi-Fixture Simple (≤ 250 GPD) c. Multi-Fixture Complex (> 250 GPD) 4. Installed per manufacturer specs.	20

PACE Residential Eligible Product Guidelines

PRODUCT CATEGORY	PRODUCT TYPE	ELIGIBILITY SPECIFICATIONS	MAXIMUM TERM (YEARS)
Outdoor Water Efficiency	Artificial Turf	1. Product must be water and air permeable. 2. Product must be non-toxic and lead free. 3. Product must be recyclable. 4. Product installation must carry ≥ 10 year warranty. 5. Installed per manufacturer specs. 6. Product infill material must be one of the following: a. Acrylic Covered Sand b. Crumb Rubber c. Zeolite	10
Outdoor Water Efficiency	Drought Tolerant Landscaping	1. Product installation area must replace existing live turf grass area. 2. Requested financing amount may include: a. Removal/disposal of existing turf grass material b. Site preparation for landscaping installation c. Installation of drought tolerant landscaping options d. Installation or conversion to eligible irrigation options 3. Requested finance amount may not include: a. Installation of live plants or biodegradable plant material b. Removal of pre-existing hardscape areas (i.e. driveways, pools, etc.) c. Installation of water features (i.e. ponds, fountains, etc.) d. Installation of any other products not listed in specification #2 4. All products to be installed to manufacturer specs and industry best practices.	20

INTRODUCED BY COUNCILMAN LEE
NOVEMBER 28, 2016

BILL NO. 9247 ORDINANCE NO.

AN ORDINANCE AMENDING SECTION 125.065.A "JOB CLASSIFICATION AND GRADE LEVEL" BY ADDING A JOB CLASSIFICATION.

NOW, THEREFORE, BE IT ORDAINED BY THE COUNCIL OF THE CITY OF FLORISSANT, ST. LOUIS COUNTY, MISSOURI, AS FOLLOWS:

Section 1: That Chapter 125.065 "Wage Increase and Schedule," subsection A "Job Classification and Grade Level," is hereby amended by adding the following job classification as so indicated:

Job Classification	Grade Level
Assistant Golf Clubhouse Manager	2

Section 2: This ordinance shall become in force and effect upon its passage and approval as provided by law.

Adopted this _____ day of _____, 2016.

_____
Jackie Pagano
President of the Council
City of Florissant

Approved this _____ day of _____, 2016.

_____
Thomas P. Schneider
Mayor, City of Florissant

ATTEST:

_____
Karen Goodwin, MMC/MRCC
City Clerk

INTRODUCED BY COUNCILMAN EAGAN
NOVEMBER 28, 2016

BILL NO. 9248 ORDINANCE NO.

AN ORDINANCE AMENDING TITLE III OF THE FLORISSANT CITY CODE, SCHEDULE XIII, TABLE XII-A "PARKING PROHIBITED AT ALL TIMES ON CERTAIN STREETS" BY DELETING HOPI DRIVE.

BE IT ORDAINED BY THE COUNCIL OF THE CITY OF FLORISSANT, ST. LOUIS COUNTY, MISSOURI, AS FOLLOWS:

Section 1: Title III of the Florissant City Code, Schedule XIII "Parking Prohibited at all times" Table XII-A "Parking Prohibited at all times on certain streets" is hereby amended by deleting the following:

Hopi Drive – From Tahoe to Yaqui

Section 2: This ordinance shall become in force and effect immediately upon its passage and approval.

Adopted this _____ day of _____, 2016.

_____
Jackie Pagano
President of the Council
City of Florissant

Approved this _____ day of _____, 2016.

_____
Thomas P. Schneider
Mayor, City of Florissant

ATTEST:

_____
Karen Goodwin, MMC/MRCC
City Clerk

FLORISSANT CITY COUNCIL

AGENDA REQUEST FORM

Date: 11/17/16

Mayor's Approval: 11/22/16

Agenda Date Requested: 11/28/16

Description of request: Remove the no parking signs on the west side of Hopi, approximately 100 yards west of Tahoe to Yaqui

Department: Street

Recommending Board or Commission: Traffic Commission

Type of request:

Ordinances	**X**	**Other**	
Appropriation		Liquor License	
Transfer		Hotel License	
Zoning Amendment		Special Presentations	
Amendment		Resolution	
Special Use Transfer		Proclamation	
Special Use		Subdivision	
Budget Amendment			
	Y/N		Y/N
Public Hearing needed: **Yes / No**	No	3 readings? : **Yes / No**	Yes

Back up materials attached:		**Back up materials needed:**	
Minutes	X	Minutes	
Maps		Maps	
Memo		Memo	
Draft Ord.		Draft Ord.	

Note: Please include all attachments necessary for documents to be generated for inclusion on the Agenda. All agenda requests are are to be turned in to the City Clerk by 5pm on Tuesday prior to the Council meeting.

For City Clerk Use Only:

Introduced by: _____

PH Speaker: _____

KGR 11/17/2016

CITY OF FLORISSANT

MEMO

TO: Councilman Eagan DATE: November 17, 2016

THRU: Mayor Thomas P. Schneider

THRU: Lou Jearls
Dir. of Public Works Lou J.

FROM: Gary Meyer
Street Supt. GM

SUBJECT: Request to Remove No Parking Sign on Hopi

The Traffic Commission has reviewed the request to remove the no parking signs on the west side of Hopi, approximately 100 yards west of Tahoe to Yaqui, at November 8, 2016 meeting. The Traffic Commission recommended removing the no parking signs on Hopi since no one could understand why they were there (see attached Minutes, Item 10/16).

cc to Council
11/22/16
Agenda

drive by. Kim Redden said they have used those up there, but it doesn't monitor the speed limit. It doesn't record the speed. Kenny Green said they have also had the speed trailer out there for a long time also. It was said that the trailer collects the data, but the sign they put up that flashes does not collect data. Mr. Jearls said he thinks part of the problem is the new drivers. They like to see how fast they can go. It was stated that we could hold this over to the next meeting to see if someone could come up with more suggestions. It was also stated that we could send it back with no further suggestions. Mike Mott said someone could go out there in a police uniform and take pictures. Then they would plead down to a misdemeanor of chewing gum in a car or something.

Motion was made by Kim Redden to recommend sending this back to Councilman Siam with no further suggestions. Motion was seconded by Steve Sutterer. On the roll call the commission voted: Donna Smith-Pupillo – yes, Mike Mott – yes, Steve Sutterer – yes, Kenny Green – yes, Allen Bluiett – yes, and Kim Redden – yes. Motion carried. Item 09/16 was dropped from the agenda.

10/16 REQUEST TO REMOVE NO PARKING SIGNS ON HOPI
APPROVED
Ward 2

Request was made to remove the no parking signs on the west side of Hopi, approximately 100 yards west of Tahoe to Yaqui. Gary Meyer was asked to check the code book to see if there was an ordinance for this and there was. Mike Mott said that is actually his ward and his councilman came down to see him to see if it was on the books. He said as a teenager he had friends there and they could never figure out why there were no parking signs there. He said in

MaryAnn Fitzpatrick Item 10/16

From: Gary Meyer
Sent: Thursday, October 06, 2016 8:06 AM
To: Lou Jearls
Cc: MaryAnn Fitzpatrick
Subject: RE: Hopi no parking - ward 3

Lou,

We will look into it.

Gary

From: Lou Jearls
Sent: Wednesday, October 05, 2016 5:05 PM
To: Gary Meyer
Cc: Ward 3 Joe Eagan
Subject: FW: Hopi no parking - ward 3

Gary:
Check the code book and verify if this location is actually listed ... I'd be surprised also ...
If it is a valid 'No Parking' location ... place on the Traffic Commissions' next agenda ... with a recommendation to delete this location ...
They'll of course need to make their recommendation to the City Council for amending the City Code.
Thanks,
Lou

From: Cheryl Entwistle
Sent: Wednesday, October 05, 2016 11:33 AM
To: Lou Jearls
Subject: FW: Hopi no parking - ward 3

Thanks Lou

From: Karen Goodwin
Sent: Wednesday, October 05, 2016 11:31 AM
To: Cheryl Entwistle
Subject: FW: Hopi no parking - ward 3

From: jeagan70@aol.com [mailto:jeagan70@aol.com]
Sent: Wednesday, October 05, 2016 11:24 AM

To: Karen Goodwin; Joe Eagan
Subject: Hopi no parking

Karen,

Please send this to traffic commission and advise when it gets on the agenda.

There is currently no parking along the west side of Hopi, approximately 100 yards west of Tahoe to Yaqui. The resident who's property is effective would like to open this up for parking in order to provide a place for her guest to park. I viewed this area and cannot come up with a valid reason for the no parking zone. I would recommend to remove the no parking ban. This would not effect the no parking ban within 15 feet of an intersection, which would still be maintained.

Joe Eagan

INTRODUCED BY COUNCILWOMAN PAGANO
NOVEMBER 28, 2016

BILL NO. 9249 ORDINANCE NO.

AN ORDINANCE AMENDING TITLE III OF THE FLORISSANT CITY CODE, SCHEDULE XIV BY ADDING A NEW TABLE XIV-V "PARKING PROHIBITED AT CERTAIN TIMES" AND ADDING LOCATIONS ON ARGO AND ZURICH.

BE IT ORDAINED BY THE COUNCIL OF THE CITY OF FLORISSANT, ST. LOUIS COUNTY, MISSOURI, AS FOLLOWS:

Section 1: Title III of the Florissant City Code, Schedule XIV "Parking Prohibited certain times" by adding a new Table XIV-V "Parking Prohibited between 2pm and 4pm on school days" and by adding the following locations:

Argo – both sides from Milbank to the school entrance

Zurich – both sides from Fleming to the school entrance

Section 2: This ordinance shall become in force and effect immediately upon its passage and approval.

Adopted this _____ day of _____, 2016.

_____
Jackie Pagano
President of the Council
City of Florissant

Approved this _____ day of _____, 2016.

_____
Thomas P. Schneider
Mayor, City of Florissant

ATTEST:

_____
Karen Goodwin, MMC/MRCC
City Clerk

FLORISSANT CITY COUNCIL

AGENDA REQUEST FORM

Date: 11/17/16

Mayor's Approval: 11/22/16

Agenda Date Requested: 11/28/16

Description of request: An ordinance to restrict parking on school days, between the hours of 2:00 and 4:00 p.m., for both sides of Argo from Milbank to the school entrance, and both sides of Zurich from Fleming to the school entrance.

Department: Street

Recommending Board or Commission: Traffic Commission

Type of request:

Ordinances	**X**	**Other**	
Appropriation		Liquor License	
Transfer		Hotel License	
Zoning Amendment		Special Presentations	
Amendment		Resolution	
Special Use Transfer		Proclamation	
Special Use		Subdivision	
Budget Amendment			
	Y/N		Y/N
Public Hearing needed: **Yes / No**	No	3 readings? : **Yes / No**	Yes

Back up materials attached:		**Back up materials needed:**	
Minutes	X	Minutes	
Maps		Maps	
Memo		Memo	
Draft Ord.		Draft Ord.	

Note: Please include all attachments necessary for documents to be generated for inclusion on the Agenda. All agenda requests are are to be turned in to the City Clerk by 5pm on Tuesday prior to the Council meeting.

For City Clerk Use Only:

Introduced by: _____

PH Speaker: _____

KGR 11/17/2016

CITY OF FLORISSANT

MEMO

TO: Chief Lowery, Police Dept. DATE: November 17, 2016

THRU: Mayor Thomas P. Schneider

THRU: Lou Jearls
Dir. of Public Works Lou J. cc: Councilwoman Jackie Pagano

FROM: Gary Meyer
Street Supt. GM

SUBJECT: Request No parking During Certain Hours on Argo and Zurich

The Traffic Commission reviewed the request restrict parking on Argo and Zurich at the November 8, 2016 meeting. The Traffic Commission made a recommendation restrict parking on school days, between the hours of 2:00 and 4:00 p.m., for both sides of Argo from Milbank to the school entrance, and both sides of Zurich from Fleming to the school entrance (see attached Minutes, Item 08/16).

cc to Council
11/22/13
Angela

He said he hasn't picked up kids from grade school in years, but when he went to Charbonier, which is now Lawson, parents would always pick up the kids in the back. He said when his children went there, they weren't even allowed to go out the back doors. All pick-ups had to be on the school property, on the school parking lot. Allen Bluiett said he agrees and to keep the times consistent with the other signs in the area.

Motion was made by Mike Mott to recommend placing no parking signs on school days, between the hours of 2:00 and 4:00 p.m., for both sides of Argo from Milbank to the school entrance, and both sides of Zurich from Fleming to the school entrance, as requested. Motion was seconded by Allen Bluiett. On the roll call the commission voted: Donna Smith-Pupillo – yes, Mike Mott – yes, Steve Sutterer – yes, Kenny Green – yes, Allen Bluiett – yes, and Kim Redden – yes. Motion carried. Item 08/16 was dropped from the agenda.

0916 REQUEST TRAFFIC COMMISSION PROVIDE SUGGESTIONS FOR A SOLUTION FOR SPEEDING PROBLEMS AND LOUD MUSIC ON NORTH WATERFORD
No further suggestions
Ward 9

Request was made to elicit suggestions from the Traffic Commission to find a solution for speeding problems and loud music problems on North Waterford. Mike Mott said the Police Department has received complaints about speeding problems and loud music on North Waterford. He said the Police Department is trying to address the problems. From 9/12/15 to 9/12/16 the Florissant Police Department has issued close to 900 citations on North Waterford, so they are certainly patrolling the street and enforcing violations all of the time. The problem with North Waterford is it is a cut-thru between two major streets, and new

Item 08/16

Florissant Police Department
Patrol Support Division
Memorandum

Date: 08/29/2016

To: Chief Timothy J. Lowery

From: Sgt. Andy Haarmann, DSN 513

Subject: Request for No Parking Signs

Sir,

As a result from the attached email from Councilwoman Pagano, I directed Officer Johnson to conduct a neighborhood canvass of the area to determine the problem and to speak with the principal of Walnut Grove Elementary, Jennifer Andrade.

On 08/29/2016, Officer Johnson spoke with several of the residents on Argo and Zurich. The residents stated that between the hours of 1445 and 1545, several parents park on both sides of the street on Argo and Zurich and walk into the back entrance of Walnut Grove to pick up their children. The residents stated that the situation is exacerbated when the parents line up on Argo to get into the back entrance of the school to pick up their children. Residents state that they cannot get in or out of their driveways and it can be difficult to drive down the street at times.

Officer Johnson then spoke with Andrade who stated that parents are directed to use the Argo entrance for parent pickup because the front entrance is reserved for school buses. Parents are directed to stay in their vehicles and drive thru the car rider line to pick up their child. Andrade stated that students are not supposed to walk from the school to parked cars in the subdivision; however, she stated that they do in violation of the rules. Officer Johnson coordinated with Andrade to send another letter home to the parents to address the problem (one was sent home at the beginning of the school year).

Currently there are signs saying No Parking from 0700-1500 on school days on Argo and Milbank and on Zurich between Fleming and Argo (see attached picture and map). I am requesting that the city considers adding No Parking on school days signs between the hours of 1400 and 1600 for both sides of Argo from Milbank to the school entrance and both sides of Zurich from Fleming to the school entrance.

Respectfully submitted,

Sgt. Andy 93

Sergeant Andy Haarmann
Patrol Support Division

Capt A B 362 395 363

Andy Haarmann

From: Kathy Mansker
Sent: Friday, August 26, 2016 9:33 AM
To: Andy Haarmann
Subject: FW: Walnut Grove school - ward 7

Please see email below

-----Original Message-----
From: Cheryl Entwistle
Sent: Friday, August 26, 2016 9:22 AM
To: Kathy Mansker
Subject: FW: Walnut Grove school - ward 7

Hi Kathy,
Please forward email request below.
Thanks,
Cheryl

-----Original Message-----
From: Karen Goodwin
Sent: Friday, August 26, 2016 8:58 AM
To: Cheryl Entwistle
Subject: FW: Walnut Grove school - ward 7

-----Original Message-----
From: Ward 7 Jackie Pagano
Sent: Friday, August 26, 2016 8:57 AM
To: Karen Goodwin
Subject: Walnut Grove school

Karen,
Just received phone call from resident who lives at the intersection of Wadsworth and Argo stating that all traffic is using back entrance to school and not the entrance on Florissant Rd. She said she and her neighbors are frustrated and bothered by the noise (waking them up) and traffic in the morning and evening hours. She said cars are speeding down streets and ignoring stop signs. Please advise Thanks

Jackie Pagano
Florissant City Council
Ward 7
314-837-1315

Imagery ©2016 Google, Map data ©2016 Google 100 ft

Imagery ©2016 Google, Map data ©2016 Google 100 ft

WARNING
NEIGHBORHOOD WATCH
PROGRAM IN FORCE
WE IMMEDIATELY REPORT
ALL SUSPICIOUS ACTIVITIES
TO THE POLICE
NO PARKING
7 TO AM.
3 PM.
SCHOOL
DAYS